SKYJACK

SERVICE MANUAL

SJ6826 RT, SJ6832 RT

ROUGH TERRAIN SCISSORS

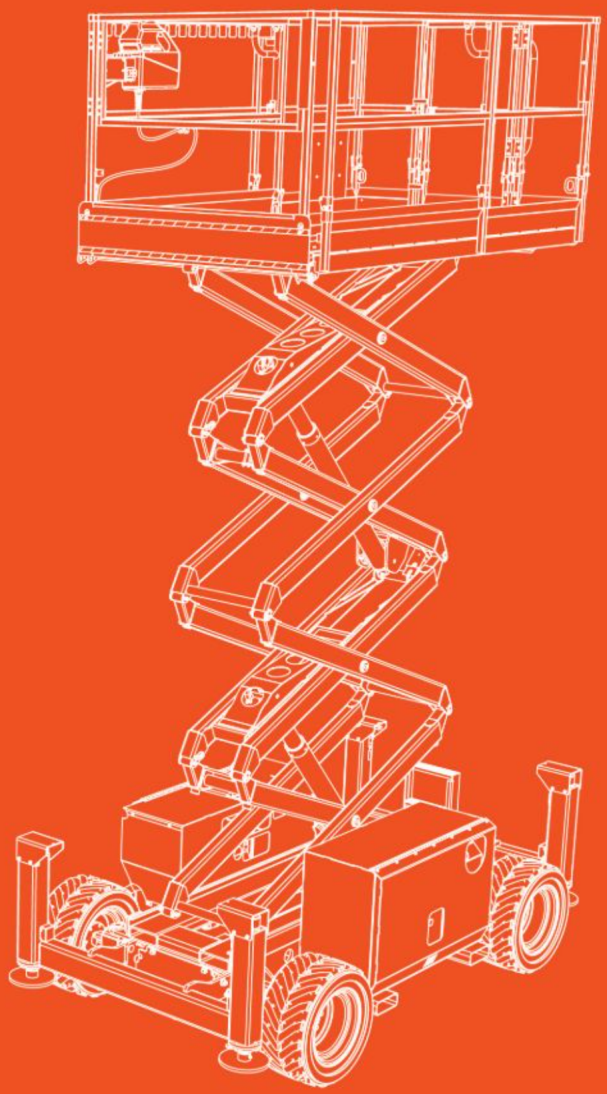

167955AGA

April 2020
ANSI/CSA

This manual is based on Serial Number:

SJ 68XXRT: 37 004 671 and 37 299 999

Please refer to the website (www.skyjack.com) for older Serial Numbers.

Skyjack Service Center
3451 Swenson Ave. St. Charles,
Illinois, 60174 USA
Phone: 630-262-0005
Toll Free: 1-800-275-9522
Fax: 630-262-0006
Email: service@skyjack.com

Parts (North America)
Toll Free: 1-800-965-4626
Toll Free Fax: 1-888-782-4825
E-mail: parts@skyjack.com

Skyjack Australia Pty Ltd.
Unit 1, 35 Honeycomb Drive
Eastern Creek
New South Wales 2766
Australia
Tel: +61 (0) 2 9854 0700
Fax: +61 (0) 2 9854 0777

Parts & Service (Europe)
Unit 1 Maes Y Clawdd
Maesbury Road Industrial Estate
Oswestry, Shropshire SY10 8NN UK
Phone: +44-1691-676-235
Fax: +44-1691-676-238
E-mail: info@skyjackeurope.co.uk

Skyjack Brasil
Alameda Júpiter, 710
Loteamento American Park Empresarial
Indaiatuba, SP, Brasil 13347-653
Tel: +55 19 3936 0132

THIS SAFETY ALERT SYMBOL MEANS:

ATTENTION! BE ALERT! YOUR SAFETY IS INVOLVED.

The Safety Alert Symbol identifies important safety messages on MEWPs, safety signs in manuals or elsewhere. When you see this symbol, be alert to the possibility of personal injury or death. Follow the instructions in the safety message.

⚠ DANGER

DANGER indicates an imminently hazardous situation which, if not avoided, will result in death or serious injury.

⚠ WARNING

WARNING indicates a potentially hazardous situation which, if not avoided, could result in death or serious injury.

⚠ CAUTION

CAUTION indicates a potentially hazardous situation which, if not avoided, may result in minor or moderate injury. It may also be used to alert against unsafe practices.

IMPORTANT

IMPORTANT indicates a procedure essential for safe operation and which, if not followed, may result in a malfunction or damage to the MEWP.

Notes

Table of Contents

Section 1 – Scheduled Maintenance 11

1.1 Read and Heed 11

1.1-1 Aerial Platform and Mobile Elevating Work Platform Definition 11

1.1-2 Purpose of Equipment 11

1.1-3 Use of Equipment 11

1.1-4 Manual 11

1.1-5 Service Policy and Warranty 11

1.1-6 Operator Safety Reminders, Warnings and Precautions 11

1.2 Maintenance and Inspection Schedule 12

1.2-1 Owner's Annual Inspection Record 12

1.2-2 Replacement Parts 12

1.2-3 Maintenance and Service Safety Tips 12

1.3 Hydraulic System & Component Maintenance and Repair 13

1.3-1 Maintenance Hints 13

1.4 About this Section 14

1.4-1 Service Bulletins 14

1.4-2 Maintenance and Inspection 14

1.4-3 Maintenance Instructions 14

1.5 Owner's Annual Inspection Record 15

1.6 Scheduled Maintenance Inspections 17

1.6-1 Electrical 17

1.6-2 Hydraulic 17

1.6-3 Manuals 18

1.6-4 Labels 18

1.6-5 Limit Switches 18

1.6-6 Engine Compartment 18

1.6-7 Hydraulic / Fuel Compartment 21

1.6-8 Platform Assembly 22

1.6-9 Lifting Mechanism 23

1.6-10 Base 27

1.7 Function Tests 29

Section 2 – Specifications 31

2.1 Specifications and Features 31

2.2 Floor Load Calculation 32

2.4 Floor Loading Pressure 33

2.3 Maximum Platform Capacities 33

2.5 Fluid Specifications 34

2.6 Torque Specifications 35
2.7 Torque Specifications for Fasteners (Imperial) 36
2.8 Torque Specifications for Fasteners (Metric) 37
2.9 Torque Specifications for Hydraulic Couplings & Hoses 38

Section 3 – System Component Identification and Schematics 39
3.1 Hydraulic Symbol Chart 40
3.2 Electrical Symbol Chart 41
3.3 AC Cord Color Code 42
3.4 Hydraulic Schematic Parts List 43
3.5 Electrical Parts List 45
3.6 Hydraulic Schematic S/N 37006450 and above 50
3.7 Hydraulic Schematic S/N 37006449 and below 51
3.8 Hydraulic Manifold Valve Port Identification 52
3.9 Hydraulic Manifold Valve Assemblies and Port Identification 53
3.10 Control Box Wiring Diagram 54
3.11 Outrigger / Hydraulic Generator Control Console Wiring Diagram 55
3.12 Scissor Arm Control Cable Wiring Diagram 56
3.13 Main Manifold Valve Harness Wiring Diagram 57
3.14 Kubota Engine Wiring Diagram – Dual Fuel System – S/N 37009728 and Below 58
3.15 Kubota Engine Wiring Diagram – Dual Fuel System – S/N 37009729 and Above 59
3.16 Kubota Engine Wiring Diagram (Diesel Fuel System) 60
3.17 Outrigger Harness Wiring Diagram 61
3.18 Hydraulic Generator Electrical Panel Assembly 62
3.19 All Motion Alarm Electrical Panel Diagram 63
3.20 Telematics Harness Wiring Diagram 64
3.21 Electrical Panel Wiring Diagram S/N 37000235 and above 65
3.22 Electrical Panel Wiring Diagram S/N 37000234 and below 66
3.23 Electrical Panel Diagram with Positive Air Shut Off Option S/N 37000235 and above 67
3.24 Electrical Panel Diagram with Positive Air Shut Off Option S/N 37000234 and below 68
3.25 Positive Air Shut Off Harness Wiring Diagram – Diesel Engine 69
3.26 Electrical Schematic (No Option with Kubota Dual Fuel Engine) S/N 37009565 and above 70
3.27 Electrical Schematic (No Option with Kubota Dual Fuel Engine) S/N 37000235 to 37009564 71
3.28 Electrical Schematic (No Option with Kubota Dual Fuel Engine) S/N 37000234 and below 72
3.29 Electrical Schematic (All Option with Kubota Dual Fuel Engine) S/N 37009565 and above 73
3.30 Electrical Schematic (All Option with Kubota Dual Fuel Engine) S/N 37000235 to 37009564 74
3.31 Electrical Schematic (All Option with Kubota Dual Fuel Engine) S/N 37000234 and below 75
3.32 Electrical Schematic (All Option with Kubota Diesel Engine) S/N 37000235 and above 76
3.33 Electrical Schematic (All Option with Kubota Diesel Engine) S/N 37000234 and below 77

Section 4 – Troubleshooting Guide 78
4.1 Introduction 78
4.2 Electrical System 79

4.2-1 All Controls Inoperative . . . 79
4.2-2 No Power To Platform . . . 79
4.2-3 All Functions Inoperative from The Platform . . . 80
4.2-4 Engine Will Not Crank from Platform or Base Control Console . . . 80
4.2-5 Engine Cranks But Does not Start – Kubota Diesel . . . 81
4.2-6 Engine Cranks But Does not Start – Kubota Dual Fuel . . . 81
4.2-7 Glow Plugs Inoperative from Engine Controls or Platform (Diesel Models) . . . 82
4.2-8 Choke Inoperative from Engine Controls or Platform (Kubota Dual Fuel) . . . 83
4.2-9 High Throttle Inoperative . . . 83
4.2-10 High Throttle On Demand Inoperative (Kubota Dual Fuel) . . . 84
4.2-11 Drive and Steer Inoperative (Machines without outriggers option) . . . 85
4.2-12 Drive and Steer Inoperative (Machines with outriggers option) . . . 86
4.2-13 Brakes Does not Release . . . 87
4.2-14 Steer Right Inoperative . . . 87
4.2-15 Steer Left Inoperative . . . 87
4.2-16 Reverse Drive Inoperative . . . 87
4.2-17 Forward Drive Inoperative . . . 88
4.2-18 First Drive Speed and Steering Inoperative . . . 89
4.2-19 Second Drive Speed Inoperative . . . 90
4.2-20 Third Drive Speed Inoperative . . . 91
4.2-21 High Drive Speed Inoperative . . . 91
4.2-22 Up Circuit Inoperative from Platform . . . 92
4.2-23 Up Circuit Inoperative from Base Control Console . . . 92
4.2-24 Up Circuit Inoperative from Platform or Base Control Console (without Outriggers) . . . 92
4.2-25 Platform does not Lift from Platform or Base Control Console with Outriggers Retracted (Lift Operates Correctly with Outriggers Extended) . . . 93
4.2-26 Platform does not Lift from Platform or Base Control Console with Outriggers Extended . . . 94
4.2-27 Platform does not Lift from Platform or Base Control Console with Outriggers Extended or Retracted . . . 95
4.2-28 Down Circuit Inoperative from Platform . . . 95
4.2-29 Down Circuit Inoperative from Base . . . 96
4.2-30 Hydraulic Generator Inoperative . . . 96
4.2-31 Hydraulic Generator does not Shut Off from Generator Switch . . . 97
4.2-32 All Outriggers Inoperative (Auto-Level and Manual) . . . 97
4.2-33 All Outriggers Inoperative (Auto-Level and Manual from Platform Controls) . . . 98
4.2-34 All Outriggers Inoperative (Base Controls only) . . . 98
4.2-35 All Outriggers Inoperative (Auto Level only) . . . 98
4.2-36 All Outriggers Inoperative (Auto Level only) . . . 99
4.2-37 Left Front Outrigger Inoperative Manually . . . 100
4.2-38 Right Front Outrigger Inoperative Manually . . . 100
4.2-39 Right Rear Outriggers Inoperative Manually . . . 100
4.2-40 Left Rear Outriggers Inoperative Manually . . . 101
4.2-41 Individual Outrigger Functions Inoperative (Auto-Level) . . . 101

4.2-42 Auto-Level Inoperative . . . 102
4.2-43 Auto All Up Inoperative (Retract) . . . 102
4.3 Hydarulic System . . . 103
4.3-1 All Functions Inoperative . . . 103
4.3-2 Steering Inoperative . . . 103
4.3-3 Lift, Steer and First Drive Speed Inoperative . . . 103
4.3-4 Second Drive Speed Inoperative . . . 103
4.3-5 Drive Inoperative . . . 103
4.3-6 Drive Sluggish . . . 103
4.3-7 Reverse Drive Inoperative . . . 104
4.3-8 Forward Drive Inoperative . . . 104
4.3-9 Drive Inoperative When in Low Drive . . . 104
4.3-10 Drive Inoperative When in High Drive . . . 104
4.3-11 Brakes Does not Release . . . 104
4.3-12 Up Circuit Inoperative . . . 104
4.3-13 Down Circuit Inoperative . . . 104
4.3-14 Hydraulic Generator Inoperative . . . 105
4.3-15 All Outriggers Inoperative . . . 105
4.3-16 Left Front Outriggers Inoperative . . . 105
4.3-17 Right Front Outriggers Inoperative . . . 105
4.3-18 Right Rear Outriggers Inoperative . . . 105
4.3-19 Left Rear Outriggers Inoperative . . . 105
4.3-20 Outriggers Drift In . . . 105

Section 5 – Service Procedures . . . 108

5.1 General . . . 108
5.1-1 Safety and Workmanship . . . 108
5.1-2 Hydraulic System . . . 108
5.2 Base . . . 108
5.2-1 Winching and Towing Procedures and Parking Brake System . . . 108
5.2-2 Release the Free-Wheeling Valve . . . 109
5.2-3 To Release the Parking Brakes Manually . . . 109
5.2-4 Wheel Bolt / Nut Inspection and Torquing Procedure . . . 109
5.2-5 Wheel Reinstallation and Torquing Procedure . . . 110
5.2-6 Reconnecting the Platform Control Box for Use from the Ground . . . 110
5.2-7 Tightening and Torque Recommendations for Hydraulic Couplings and Hoses . . . 111
5.2-8 Torquing Using the Flats-From-Wrench-Resistance Method . . . 112
5.2-9 Checking the Holding Valve . . . 113
5.2-10 System Pressure Setting . . . 113
5.2-11 Adjusting the Pressure . . . 114
5.2-12 Lift Pressure Setting . . . 114
5.2-13 Grease Points . . . 116
5.2-14 Electronic Tilt Switch Setup Procedure . . . 117

5.3 Engine 120
5.3-1 Kubota Dual Fuel (DF972 / WG752) Resistance Checks 120
5.3-2 Fan Belt Replacement and Adjustment 121
5.3-3 Kubota Dual Fuel (DF972 / WG752) Engine Throttle Setting 122
5.3-4 Kubota Diesel (D902) Engine Throttle Setting 124
5.3-5 Replacing the Air Cleaner Element 125
5.3-6 Replacing the Fuel Filter Element (Kubota D902) 126
5.3-7 Bleeding the Fuel System of Air (Kubota D902) 126
5.3-8 Replacing the Oil Filter Cartridge 127
5.3-9 Changing the Oil 127
5.3-10 Checking and Replenishing the Radiator Coolant Level 128
5.3-11 Draining and Refilling the Radiator 128
5.4 Outriggers 129
5.4-1 Auto-Leveling Outrigger PC Board Layout 129
5.4-2 Outrigger Mechanical Limit Switch Wiring Diagram 130
5.4-3 Auto-Leveling Outrigger Settings and Error Codes 131
5.4-4 Auto-Leveling Outrigger Error Code Breakdown 132
5.4-5 Hand Held (EZcal) Calibration / Diagnostic Tool Key Functions 133
5.4-6 Outrigger Control Module (OCM1) Instructions 134
5.4-7 Auto-Leveling Outrigger Control Module Pin Reference Table 138
5.4-8 Outrigger Upper Limit Switch (LS61, LS62, LS63, LS64) Replacement and Adjustment 139
5.4-9 Outrigger Lower Limit Switch (LS65, LS66, LS67, LS68) Replacement and Adjustment 140
5.5 Scissors 141
5.5-1 High Speed Cutout Limit Switch (LS5) Replacement and Adjustment 141
5.5-2 High Speed Cutout Limit Switch Testing 142
5.6 Platform 142
5.6-1 Gate Springe Hinge Adjustment 142

Notes

Section 1 – Scheduled Maintenance

1.1 Read and Heed

Skyjack is continuously improving and expanding product features on its equipment, therefore, specifications and dimensions are subject to change without notice.

1.1-1 Aerial Platform and Mobile Elevating Work Platform Definition

A mobile device that has a positionable platform supported from ground level by a structure.

1.1-2 Purpose of Equipment

The Skyjack SJ Compact Rough Terrain Series MEWPs are designed to transport and raise personnel, tools and materials to overhead work areas.

1.1-3 Use of Equipment

The MEWP is a highly maneuverable, mobile work station. Work platform elevation and elevated driving must only be done on a firm, level surface.

1.1-4 Manual

Operating Manual: The operating manual is considered a fundamental part of the aerial platform. It is a very important way to communicate necessary safety information to users and operators. A complete and legible copy of this manual must be kept in the provided weather-resistant storage compartment on the aerial platform at all times.

Service & Maintenance: The purpose of this is to provide the customer with the servicing and maintenance procedures essential for the promotion of proper machine operation for its intended purpose.

All information in this manual should be read and understood before any attempt is made to service the machine. The updated copy of the manuals are found on the company's website: *www.skyjack.com*.

1.1-5 Service Policy and Warranty

Skyjack warrants each new product to be free of defective parts and workmanship for the first 2 years or 3000 hours, whichever occurs first. Any defective part will be replaced or repaired by your local Skyjack dealer at no charge for parts or labor. In addition, all products have a 5 year structural warranty. Contact the Skyjack Service Department for warranty statement extensions or exclusions.

1.1-6 Operator Safety Reminders, Warnings and Precautions

Operator safety is Skyjack's priority. The operator should comply with all applicable safety-related reminders, warnings and precautions found in the Operating Manual. They should be read and understood completely before operating the aerial platform.

1.2 Maintenance and Inspection Schedule

The actual operating environment of the work platform governs the use of the maintenance schedule. The inspection points covered in *Table 1.2. Maintenance and Inspection Checklist*, indicates the areas of the MEWP to be maintained or inspected and at what intervals the maintenance and inspections are to be performed.

1.2-1 Owner's Annual Inspection Record

It is the responsibility of the owner to arrange quarterly and annual inspections of the MEWP. *Table 1.1*. Owner's Annual Inspection Record is to be used for recording the date of the inspection, owner's name, and the person responsible for the inspection of the work platform.

1.2-2 Replacement Parts

Use only original replacement parts. Parts such as batteries, wheels, railings, etc. with weight and dimensions different from original parts will affect stability of the MEWP and must not be used without manufacturer's consent.

All replacement tires must be of the same size and load rating as originally supplied tires; to maintain safety and stability of MEWP.

Consult SKYJACK's Service Department for optional tires specifications and installation.

⚠ WARNING

Any unit that is damaged or not operating properly must be immediately tagged and removed from service until proper repairs are completed.

1.2-3 Maintenance and Service Safety Tips

Maintenance and repair should only be performed by personnel who are trained and qualified to service this MEWP.

All maintenance and service procedures should be performed in a well lighted and well ventilated area.

Anyone operating or servicing this MEWP must read and completely understand all operating instructions and safety hazards in this manual and operating manual.

All tools, supports and lifting equipment to be used must be of proper rated load and in good working order before any service work begins. Work area should be kept clean and free of debris to avoid contaminating components while servicing.

Ensure personnel are clear from under unsupported components/systems that are at risk of movement during maintenance.

All service personnel must be familiar with employer and governmental regulations that apply to servicing this type of equipment.

Keep sparks and flames away from all flammable or combustible materials.

Properly dispose of all waste material such as lubricants, rags, and old parts according to the relative law provisions obtaining in the country.

Before attempting any repair work, disconnect the main power conenctors.

Keep personnel clear of components, systems or unsupported loads that may move unexpectedly during maintenance procedures.

Preventive maintenance is the easiest and least expensive type of maintenance.

1.3 Hydraulic System & Component Maintenance and Repair

The following points should be kept in mind when working on the hydraulic system or any component:

⚠ WARNING

Escaping fluid from a hydraulic pressure leak can damage your eyes, penetrate the skin and cause serious injury. Use proper personal preotection at all times.

1. Any structure has limits of strength and durability. To prevent failure of structural parts of hydraulic components, relief valves which limit pressure to safe operating values are included in the hydraulic circuits.
2. Tolerance of working parts in the hydraulic system is very close. Even small amounts of dirt or foreign materials in the system can cause wear or damage to components, as well as general faulty operation of the hydraulic system. Every precaution must be taken to assure absolute cleanliness of the hydraulic oil.
3. Whenever there is a hydraulic system failure which gives reason to believe that there are metal particles or foreign materials in the system, drain and flush the entire system and replace the filter cartridges. A complete change of oil must be performed under these circumstances.
4. Whenever the hydraulic system is drained, check the magnets in the hydraulic reservoir for metal particles. If metal particles are present, flush the entire system and add a new change of oil. The presence of metal particles also may indicate the possibility of imminent component failure. A very small amount of fine particles is normal.
5. All containers and funnels used in handling hydraulic oil must be absolutely clean. Use a funnel when necessary for filling the hydraulic oil reservoir, and fill the reservoir only through the filter opening. The use of cloth to strain the oil should be avoided to prevent lint from getting into the system.
6. When removing any hydraulic component, be sure to cap and tag all hydraulic lines involved. Also, plug the ports of the removed components.
7. All hydraulic components must be disassembled in spotlessly clean surroundings. During disassembly, pay particular attention to the identification of parts to assure proper reassembly. Clean all metal parts in a clean mineral oil solvent. Be sure to thoroughly clean all internal passages. After the parts have been dried thoroughly, lay them on a clean, lint-free surface for inspection.
8. Replace all O-rings and seals when overhauling any component. Lubricate all parts with clean hydraulic oil before reassembly. Use small amounts of petroleum jelly to hold O-rings in place during assembly.
9. Be sure to replace any lost hydraulic oil when completing the installation of the repaired component, and bleed any air from the system when required.
10. All hydraulic connections must be kept tight. A loose connection in a pressure line will permit the oil to leak out or air to be drawn into the system. Air in the system can cause damage to the components and noisy or erratic system operation.

1.3-1 Maintenance Hints

Three simple maintenance procedures have the greatest effect on the hydraulic system performance, efficiency and life. Yet, the very simplicity of them may be the reason they are so often overlooked. They are simply these:

1. Change filters annually. The filters will need to be changed more often depending on the operating conditions. Dirty, dusty, high moisture environments may cause the hydraulic system to be contaminated more quickly.
2. Maintain a sufficient quantity of clean hydraulic oil of the proper type and viscosity in the hydraulic reservoir.
3. Keep all connections tight.

1.4 About this Section

This section contains the maintenance and inspection schedule that is to be performed.

References are made to the procedures in Section 5 that outline detailed step-by-step instructions for checks and replacements.

1.4-1 Service Bulletins

Before performing any scheduled maintenance inspection procedure, refer to service bulletins found in our web site: *www.skyjackinc.com* for updates related to service and maintenance of this MEWP.

1.4-2 Maintenance and Inspection

Death or injury can result if the MEWP is not kept in good working order. Inspection and maintenance should be performed by competent personnel who are trained and qualified on maintenance of this MEWP.

⚠ WARNING

Failure to perform each procedure as presented and scheduled may cause death, serious injury or substantial damage.

NOTE

Preventive maintenance is the easiest and least expensive type of maintenance.

- Unless otherwise specified, perform each maintenance procedure with the MEWP in the following configuration:
  - MEWP parked on a flat and level surface
  - Disconnect the batteries by disconnecting the main power connectors.
- Repair any damaged or malfunction components before operating MEWP.
- Keep records on all inspections.

1.4-3 Maintenance Instructions

This manual consists of four schedules to be done for maintaining on an MEWP. Inspection schedule frequency is shown below:

Issue or Symptom		
PDI/Frequent	**B**	Perform PDI prior to each delivery, or Frequent Inspection every 3 months or 150 hours.
Annual	**B + C**	Perform Scheduled Maintenance Inspections every year.
Additional	*	Perform at time sensitive maintenance intervals.

- Make copies of the maintenance and inspection checklist to be used for each inspection.
- Check the schedule on the checklist for the type of inspection to be performed.
- Place a check in the appropriate box after each inspection procedure is completed.
- Use the maintenance and inspection checklist and step-by-step procedures in Section 1 to perform these inspections.
- If any inspection receives a fail, tag and remove the MEWP from service.
- If any MEWP component(s) has been repaired, an inspection must be performed again before removing the tag. Place a check in the repair column.

Legend	
Pass	**P**
Fail	**F**
Repaired	**R**
Not applicable	**N/A**

Table 1.5 Owner's Annual Inspection Record

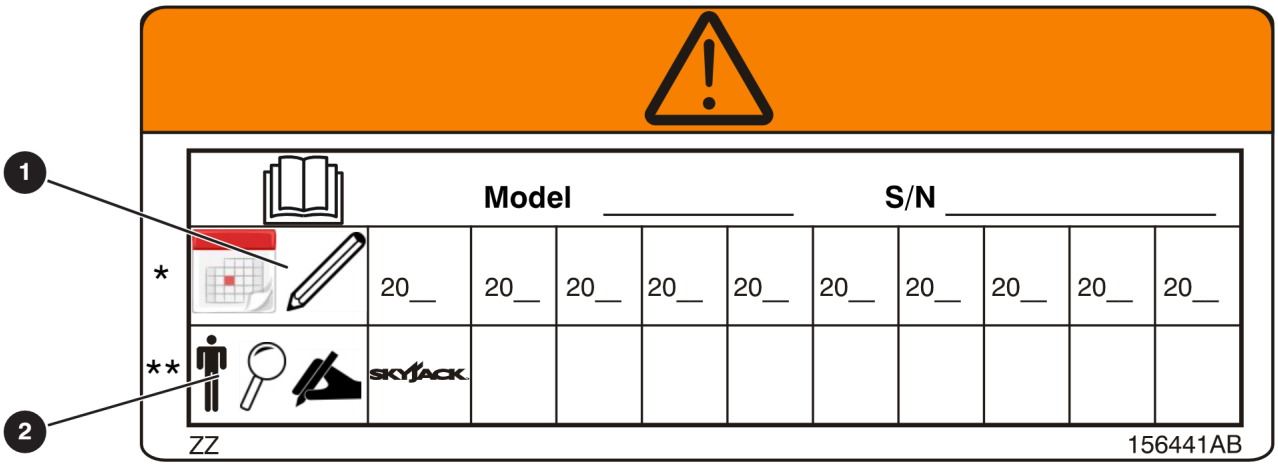

Figure 01 *This decal is located on the scissor assembly. It must be completed after an annual inspection has been completed. Do not use the aerial platform if an inspection has not been recorded in the last 13 months.*

Description	Label Pictorial	Description	Label Pictorial
● **Inspection Date**		● **Inspector Signature**	

Pre-Delivery/Maintenance Inspection Checklist

Vertical Mast, SJIII, & Rough Terrain

Serial Number: _____ Product Owner: _____

Model: _____

Hourmeter Reading: _____ Product User: _____

Date/Time: _____

Use this form for Pre-Delivery Inspections (PDI) prior to each rental, lease or sale, or as a guide for all Frequent Inspections and Annual Inspections. Refer to the applicable Operating and Service Manuals for inspection details (eg. Visual Inspection and Function Tests, Torque Specs., Engine Oil, Chain Inspection Intervals, etc.).

Inspection Type Schedule	
❑ PDI	B
❑ Frequent	B
❑ Annual	B + C

B - Perform PDI prior to each delivery or Frequent Inspections every 3 months or 150 hrs. For further details refer to Service & Operating Manuals.

C - Perform Scheduled Maintenance Inspections every year. For further details refer to Service & Operating Manuals.

P - Pass
F - Fail
R - Repaired
N/A - Not Applicable

Check the appropriate box as each item is inspected. If an item is found to be not acceptable, please describe the issue in the comments box provided.

Items for Inspection		P	F	R	N/A
Refer to skyjack.com for the latest service bulletins.	B				
Ensure Annual Inspection has been completed within the last 13 months.	B				
Manuals & Required Documents. In storage box, in good condition & legible.	B				
Labels. In place, secure & legible.	B				
Limit Switches. Secured & no obstructions or damage.	B				
Main Power Disconnect Switch. Cables secure & in working order.	B				
Battery/ Hydraulic Tray. Latch is secure, & no missing parts.	B				
Battery Charger. Secure, & no damage.	B				
Battery. No damage, tight connections, fluid levels correct. Clean terminals and cable ends.	B				
Manifolds. Tight fittings and hoses & no damage or leaks. Tight wire connections & no missing parts.	B, C				
Motor Controller. Secure & no damage. No loose connections.	B				
Electrical Panel / Control Module. Secure & no damage. Tight wire connections and fasteners.	B				
Hydraulic Tank. Filler cap secure & no damage or leaks.	B				
Hydraulic Oil. Level at, or slightly above top mark.	B, C				
Hydraulic Components & Hoses. Secure & no damage or leaks.	B				
Base Weldment. No deformation or cracks.	B				
Base Control Switches. Switches to neutral position & no damage.	B				
Free-wheeling Valve Knob. Secure & no damage or missing parts.	B				
Ladder. Secure & no damage.	B				
AC Power to Platform (Plug Cord Receptacle). No obstructions, dirt or damage.	B				
Pothole Protection Device. Check both sides for obstructions, dirt, or damage.	B				
Brakes. Secure & no damage or leaks.	B, C				
Steer Cylinder Assembly. Secure & no damage, leaks or missing parts.	B				
Wheel/Tire Assembly. Check all tires for damage, wear & proper alignment. Lug nuts torqued as recommended.	B				
Axles. Secure & no missing parts. Tight fittings and hoses & no leaks.	B				
Tie Rod. End studs locked & no damage.	B				
Tilt (Load) Sensor. Secure & no damage.	B				
Emergency Lowering Access Rod. Secure & no damage.	B				
Engine Tray. No damage or missing parts.	B				

Items for Inspection		P	F	R	N/A
Engine Control Console. Secure & no damage.	B				
Engine Air Filter. No damage or missing parts.	B, C				
Engine Oil. Level between "L" and "H". Ensure oil change interval has not been exceeded.	B				
Radiator. Secure & no damage or missing parts. Check coolant level.	B, C				
Muffler and Exhaust. Secure & no damage.	B				
Fuel Shut-off Valve. No damage or missing parts.	B				
Fuel Tank. Filler cap is secure & no damage.	B				
Fuel Leaks. Tight fittings and hoses & no damage or leaks.	B				
Propane Tank. Straps fastened to brackets & coupler tight.	B				
Propane Tank Leaks. No leaks (refer to service manual for procedure).	B				
Scissor Assembly. No deformation/damage. Pins secure. Cables & wires routed with no damage.	B				
Mast Assembly. No damage or deformation. Lubricated	B, C				
Mast Chains. No damage or missing parts.	B, C				
Control Cables. No damage or missing parts.	B, C				
Rollers. Secure & no obstructions, dirt, or damage/wear.	B, C				
Wear Pads. No damage/wear or missing parts. Fasteners tightened.	B, C				
Scissor Bumpers. Secure & no damage.	B				
Sliders. Secure & no obstructions, dirt, or damage/wear.	B				
Maintenance Support. Secure & no damage.	B				
Lift Cylinder(s). No damage or missing parts. Tight fittings and hoses & no leaks.	B				
Scissor Pins. No damage/wear or missing parts.	B				
Platform Control Console. Switches to neutral position & secure. No missing parts.	B				
Raillings and Gate/Chain. Secure & no damage or missing parts.	B				
Lanyard Attachment Anchorage. Attachment rings secure & no damage.	B				
AC Outlet. No obstructions, dirt, or damage.	B				
Powered Extension Control Console. Switches to neutral position & secure. No missing parts.	B				
Extension Deck. Secure & no damage or missing parts. Check fluid level (if applicable).	B				
Outriggers. No damage or missing parts.	B				
Scissor Guards. Secure & no damage.	B				
Greasing Points. No obstructions, dirt, or damage.	B, C				
Function Tests (Refer to your corresponding Serial #'s Operating Manual for information on running these tests.)		❑ PASS ❑ FAIL			

Comments:

The undersigned confirms that all areas listed have been inspected, and any and all discrepancies have been brought to the attention of the owner. Furthermore, the undersigned confirms that all discrepancies have been corrected prior to using this machine.

Owner: _____ / _____ / _____
Print Name Signature Date (DD/MM/YY)

User: _____ / _____ / _____
Print Name Signature Date (DD/MM/YY)

Note: Visit skyjack.com for a printable copy of this form.

167830AC

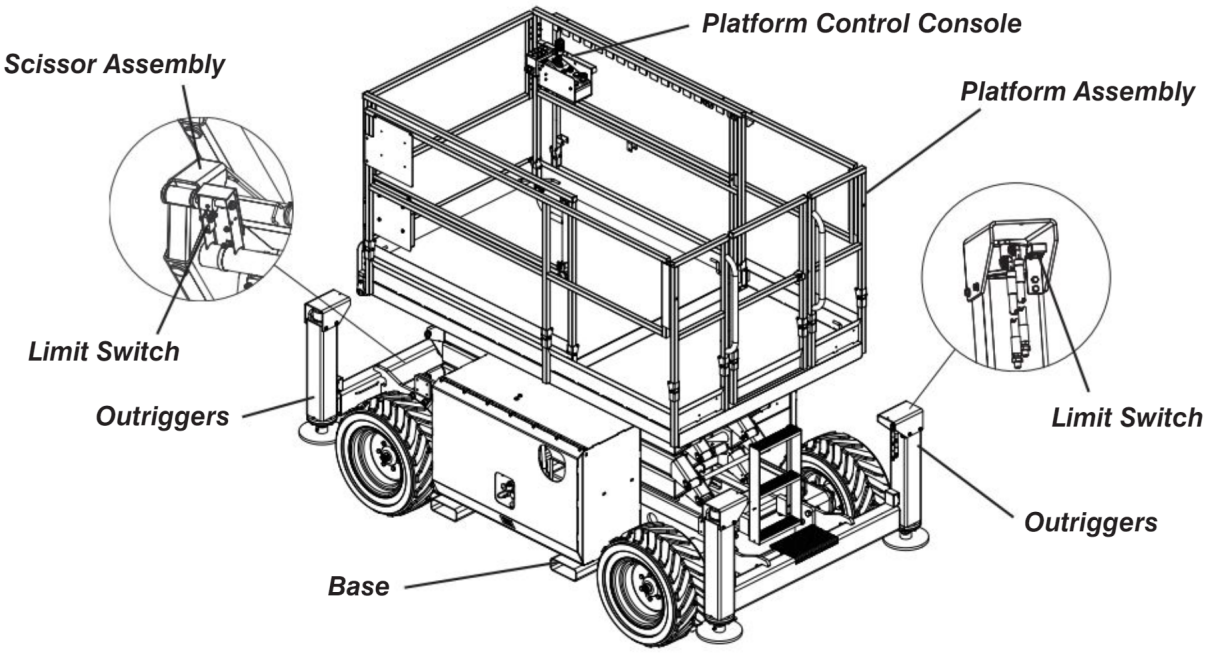

1.6 Scheduled Maintenance Inspections

Begin the scheduled maintenance inspections by checking each item in sequence for the conditions listed in this section.

⚠ WARNING

Risk of personal injury. Do not operate MEWP until all malfunctions have been corrected.

⚠ WARNING

Risk of personal injury. Make sure MEWP power is off during your visual and daily maintenance inspections.

1.6-1 Electrical

Maintaining the electrical components is essential to good performance and service life of the MEWP

Inspect the following areas for chafed, corroded and loose wires:

- Base to platform cables and wiring harness.
- Engine compartment electrical panel.
- Engine wiring harness.
- Hydraulic / electrical wiring harnesses.

1.6-2 Hydraulic

Maintaining the hydraulic components is essential to good performance and service life of the MEWP.

Perform a visual inspection around the following areas:

- Hydraulic tank filter, fittings, hoses, emergency power unit (if equipped) and base surfaces.
- Engine compartment fittings, hoses, main pump, and filter.
- All hydraulic cylinders.
- All hydraulic manifolds.
- The underside of the base.
- Ground area under the MEWP.
- Outriggers.

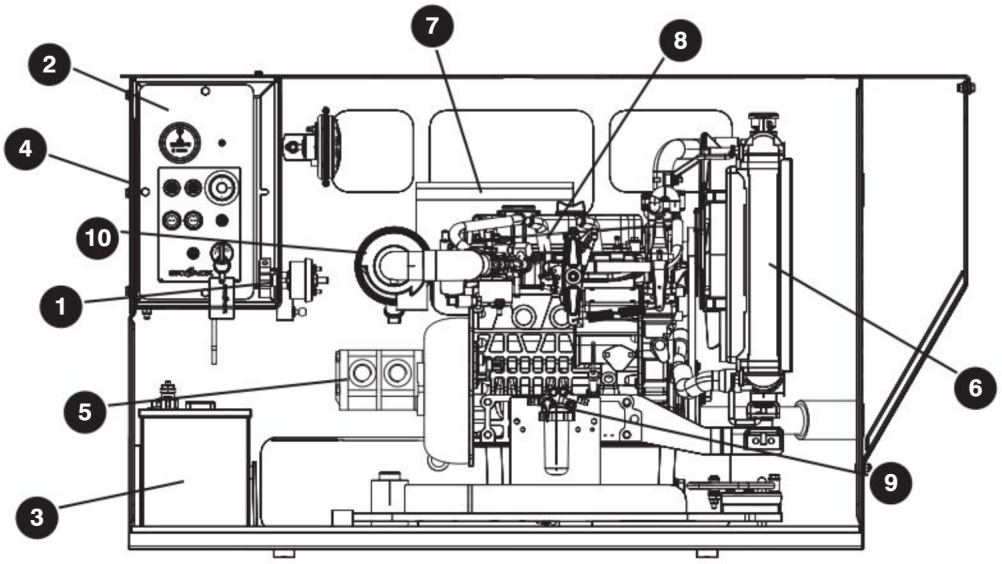

1.6-3 Manuals (B)

Ensure a copy of the operating manual and any other important documents are enclosed in the manual storage box.

- Check to be sure manual storage box is present and in good condition.
- Ensure manuals are legible and in good condition.
- Always return manuals to the manual storage box after use.

1.6-4 Labels (B)

- Refer to the labels section in the operating manual and determine that all labels are in place and are legible.

1.6-5 Limit Switches (B)

Detecting limit switches malfunction is essential to safe MEWP operation. Ensure limit switches are properly secured with no signs of visible damage and movement is not obstructed.

Visually inspect all limit switch located inside the scissor arms and the outrigger assemblies for the following:

- Broken or missing actuator arm.
- Missing fasteners.
- Loose wiring.

1.6-6 Engine Compartment

⚠ WARNING

Risk of burns to exposed skin. Beware of hot engine components.

- Ensure compartment latch is secure and in proper working order.

1 Main Power Disconnect Switch (B)

- Turn main power disconnect switch to off position.
- Ensure all cables are secure and switch is in proper working condition.

2 Base Control Switches (B)

- Ensure there are no signs of visible damage and all switches are in their neutral positions.

3 Battery (B)

- Proper battery condition is essential to good performance and operational safety. Improper fluid levels or damaged cables and connections can result in component damage and hazardous conditions.

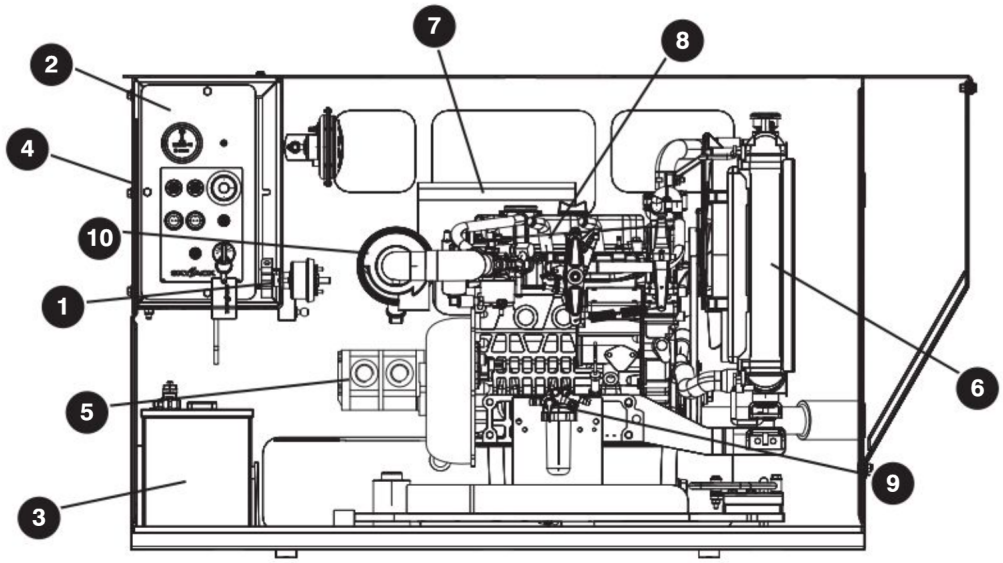

⚠ WARNING

Risk of explosion. Keep flames and sparks away from batteries. Do not smoke near batteries.

⚠ WARNING

Risk of burns to exposed skin. Wear proper eye and facial protection as well as appropriate protective clothing. If contact occurs, immediately flush with cold water and seek medical attention.

- Check battery case for damage.
- Inspect batteries frequently. Clean battery terminals and cable ends thoroughly with a terminal cleaning tool or wire brush.
- Make sure all battery connections are tight. If applicable, check battery electrolyte fluid level frequently.
- Make sure electrolyte level covers the plates by at least 1/2 in. (13 mm) of solution. Use distilled or demineralized water only.
- Replace battery if damaged or incapable of holding a lasting charge.

⚠ WARNING

Risk of equipment failure. Use original or manufacturer-approved parts and components for the MEWP.

4 Tilt Sensor **(B, C)**

- Ensure load sensor is properly secured and there is no visible damage.
- Load Sensing System should be tested on the first anniversary of the unit being in service. Afterwards, it should only be tested if major components have been replaced.

5 Hydraulic Pump **(B)**

- Ensure there are no loose or missing parts and there is no visible damage.
- Ensure all bolts are properly tightened.
- Ensure all fittings and hoses are properly tightened and there is no evidence of hydraulic leakage.

6 Radiator **(B, C)**

⚠ WARNING

Risk of burns to exposed skin. Beware of hot liquids and radiator components. Allow the engine to cool before performing any maintenance.

- Ensure radiator is secure.

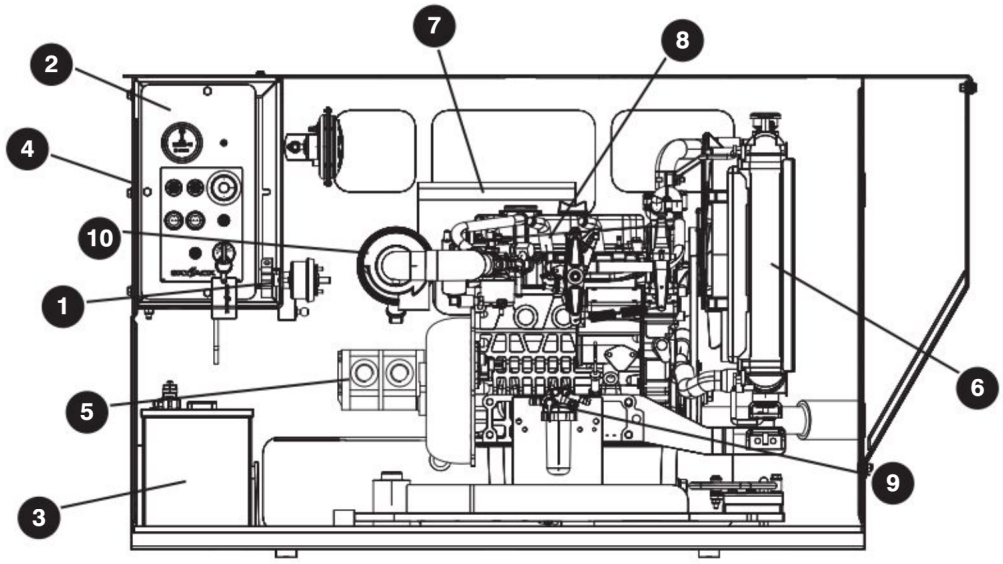

- Ensure there are no loose or missing parts and there is no visible damage.
- Check coolant level and add as needed.
- For recommended coolant change interval, refer to engine manual.

7 Muffler and Exhaust (B)

- Ensure muffler and exhaust system are properly secured, with no evidence of damage.

8 Engine Tray (B)

- Ensure there are no loose or missing parts and no visible damage to the engine tray.
- Ensure that fasteners/bolts/pins/latches are in place.

Engine Oil (B, C)

- Maintaining the engine components is essential to good performance and service life of the MEWP.
- Check oil level on dipstick.
- Oil level should be between the L and H marks on the dipstick.
- For recommended oil change interval, refer to engine manual.

9 Fuel Shut-off Valve (B)

- Ensure there are no loose or missing parts and there is no visible damage.

10 Engine Air Filter (B, C)

- Ensure there are no loose or missing parts and there is no visible damage.
- For engine air filter maintenance procedure, refer to engine manual.
- For engine air filter replacement procedure, refer to engine manual.

Fuel Leaks (B, C)

- Ensure there are no fuel leaks.

⚠ WARNING

Risk of explosion. Engine fuels are combustible. Inspect the MEWP in an open, well-ventilated area away from heaters, sparks and flames. Always have an approved fire extinguisher within easy reach.

- Ensure fuel pump, fuel filter, hoses and fittings show no visible damage and no evidence of fuel leakage.
- For engine fuel filter replacement procedure, refer to engine manual.

⚠ IMPORTANT

Close engine compartment before operating. Push it in until the two latches lock to base.

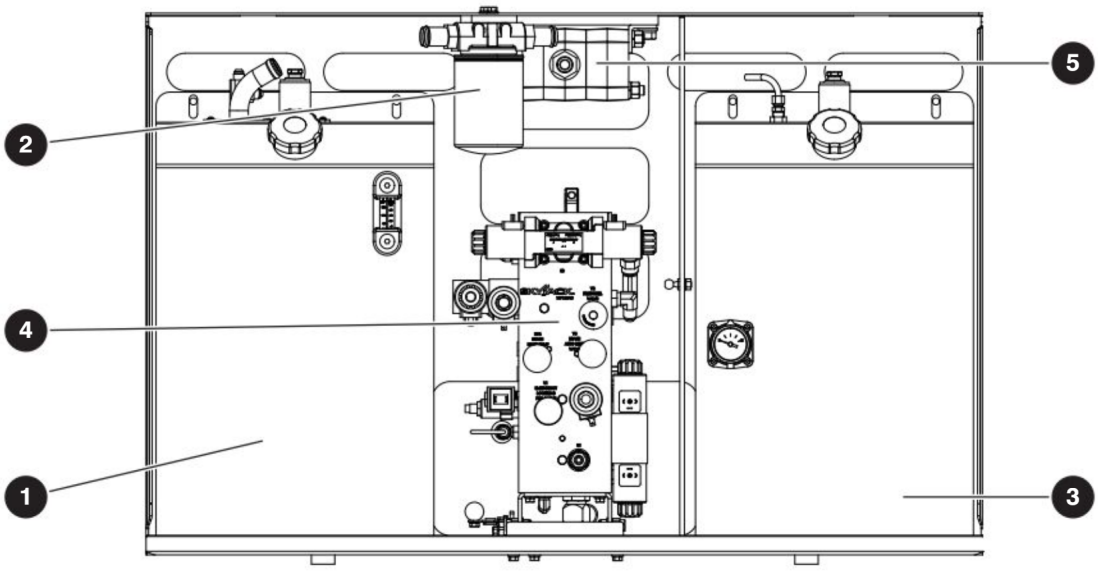

1.6-7 Hydraulic / Fuel Compartment

- Ensure compartment latch is secure and in proper working order.

1 Hydraulic Tank (B)

- Ensure hydraulic filler cap is secure.
- Ensure tank shows no visible damage and no evidence of hydraulic leakage.

Hydraulic Oil (B,C)

- Ensure platform is fully lowered, and outriggers retracted, and then visually inspect the sight gauge located on the side of the hydraulic oil tank. Check oil level against label that indicates minimum and maximum oil levels.
- Review information to keep in mind when working on the hydraulic system.Refer to 1.6 Scheduled Maintenance Inspections

2 Hydraulic Return Filter (B)

- Ensure filter element is secure.
- Ensure there are no signs of leakage or visible damage.

3 Fuel Tank (B)

⚠ IMPORTANT

Before using the MEWP, always make sure there is enough fuel for expected use.

- Ensure fuel filler cap is secure.
- Ensure tank shows no visible damage and no evidence of fuel leakage.

Fuel Leaks (B)

- Ensure there are no fuel leaks.

⚠ WARNING

Risk of explosion. Engine fuels are combustible. Inspect the aerial platform in an open, well-ventilated area away from heaters, sparks and flames. Always have an approved fire extinguisher within easy reach.

- Ensure fuel pump, fuel filter, hoses and fittings show no visible damage and no evidence of fuel leakage.

4 Main Manifold (B, C)

- Ensure all fittings and hoses are properly tightened and there is no evidence of hydraulic leakage.
- Ensure there are no loose wire connections or missing fasteners.

5 Gear Type Flow Divider (B)

- Ensure there are no loose or missing parts and there is no visible damage.

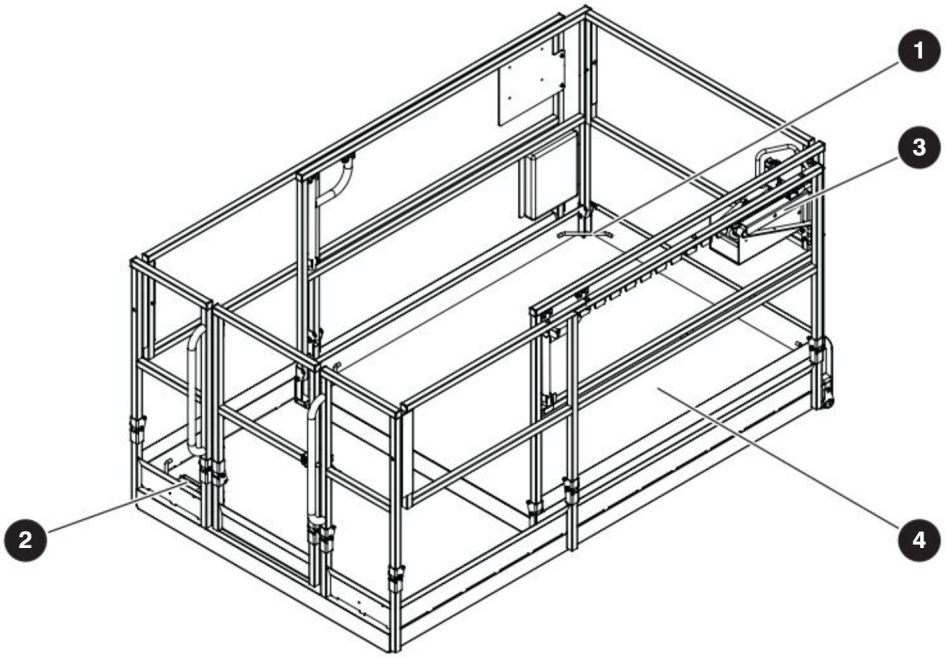

1.6-8 Platform Assembly

⚠ CAUTION

Risk of slipping or falling. Always maintain three points of contact when mounting and dismounting the platform.

- Use the ladder of MEWP to access platform.
- Close the gate.
- Ensure there are no loose or missing parts and there is no visible damage.
- Ensure all fasteners are securely in place.
- Ensure all railings are properly positioned and secured.
- Ensure gate is in good working order.

1 Fall Protection Anchorage (B)

- Ensure attachment rings are secure and have no visible damage.

2 AC Outlet on Platform (B)

- Ensure outlet has no visible damage and free from dirt or obstructions.

3 Platform Control Console (B)

- Ensure all switches and controller are returned to neutral and are properly secured.
- Ensure there are no loose or missing parts and there is no visible damage.

⚠ CAUTION

Risk of slipping or falling. Always maintain three points of contact when mounting and dismounting the platform.

- Use the ladder to dismount from platform.

4 Extension Deck (If Equipped) (B)

- Ensure assembly is securely attached to the bottom of the platform.
- Ensure there are no loose or missing parts and there is no visible damage or leaks.

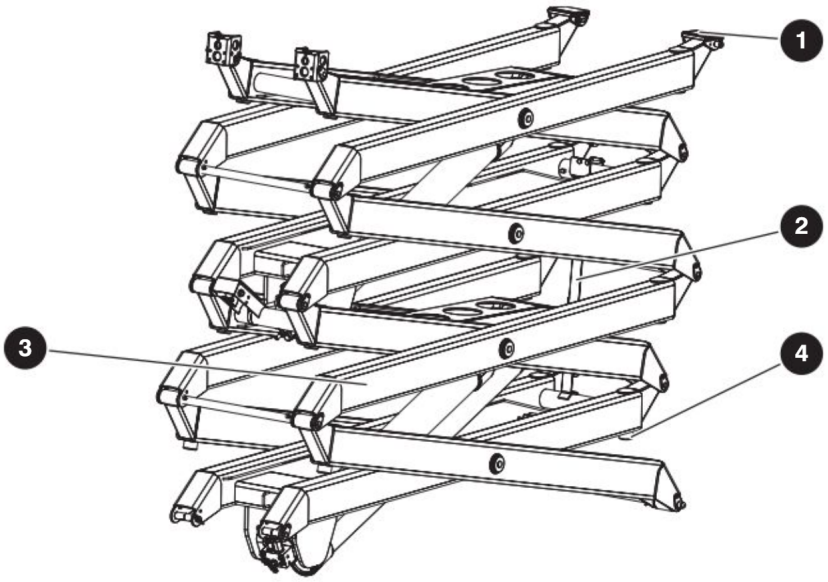

1.6-9 Lifting Mechanism

1 Sliders (B)

⚠ CAUTION

Avoid risk of scissor assembly collapsing when servicing. Always install maintenance support. Raise the platform until there is adequate clearance to swing it down into place.

- Ensure sliders are secure and there is no visible damage.
- Ensure slider path of travel is free from dirt and obstructions.

2 Maintenance Support (B)

- Ensure maintenance support is properly secured and shows no visible damage.

3 Scissor Assembly (B)

- Ensure scissor assembly shows no visible damage and no signs of deformation in weldments.
- Ensure all pins are properly secured.
- Ensure cables and wires are properly routed and shows no signs of wear and/or physical damage.

4 Scissor Bumpers (B)

- Ensure bumpers are secure and shows no sign of visible damage.

Scissor Pin Inspection (B)

Complete a structural inspection of the scissor pin connections, looking for indicators of pin and/or scissor arm damage. These indicators include, but are not limited to:

- Noise coming from binding or seized pins.
- Rust forming near pin joint.
- Cracks in welds or in surrounding metal.
- Evidence of metal dust or shavings from wearing components.
- Broken or missing pin retainer bolts.
- Broken or missing pin retainers.
- Rotated pin.
- Elongation or enlargement of pin hole.

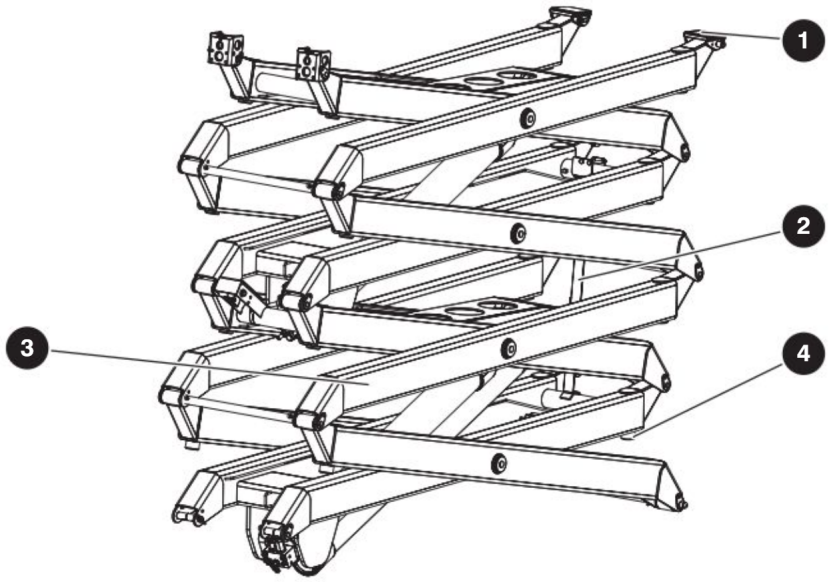

Examples of pivot pin connections with no damage:

- No rust.
- Pin has not rotated.
- Area is clear of dust/metal shavings.
- Pin retainer and retainer bolts are in place.

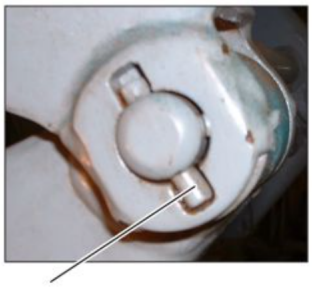

Pin retainer in place

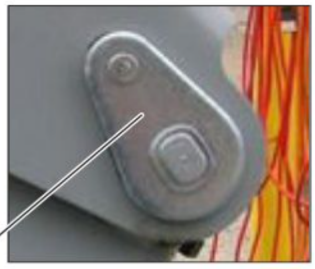

No rust. Pin has not rotated. Area is clean of dust/metal shavings

Center pin pivot – Outer

Center pin pivot – Middle

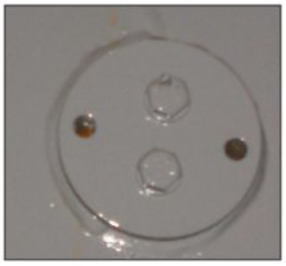

Center pin pivot – Inner

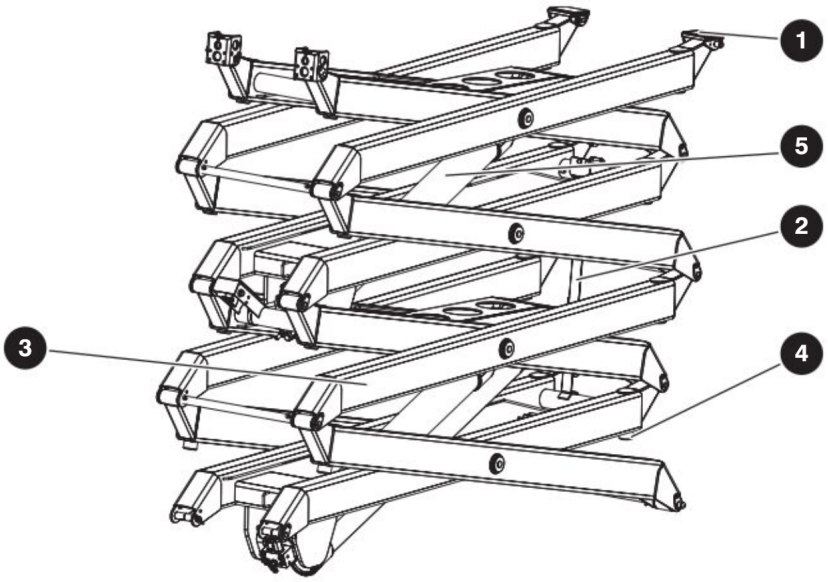

Examples of damaged pin connections:

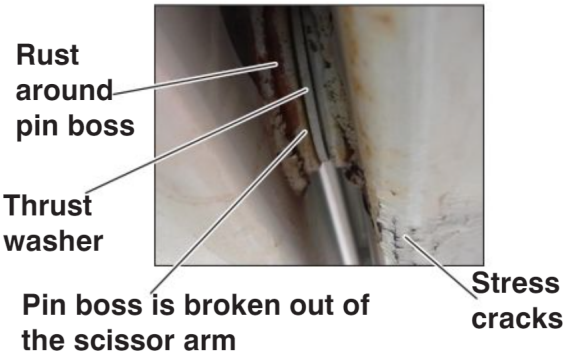

Scissor end pin connections showing symptoms of damage must be inspected after removing the applicable pins and bushings. Examine the hole for any signs of damage or elongation. If required, new pins and bushings can be installed provided there is no structural damage to the scissor arms.

⚠ WARNING

Avoid a hazardous situation by not operating a machine that has structural damage to the scissor assembly. Have machines repaired by a qualified service technician. Any units showing this type of damage should be removed from service and repaired by a qualified technician immediately.

Any units with structural damage to any pin connection or scissor arm must be immediately removed from service and repaired by a qualified technician. Contact Skyjack Service for repair instructions.

5 Lift Cylinders (B)

- Ensure each lift cylinder is properly secured, there are no loose or missing parts, and there is no evidence of damage.
- Ensure all fittings and hoses are properly tightened and there is no evidence of hydraulic leakage.

Model SJ6832 RT shown

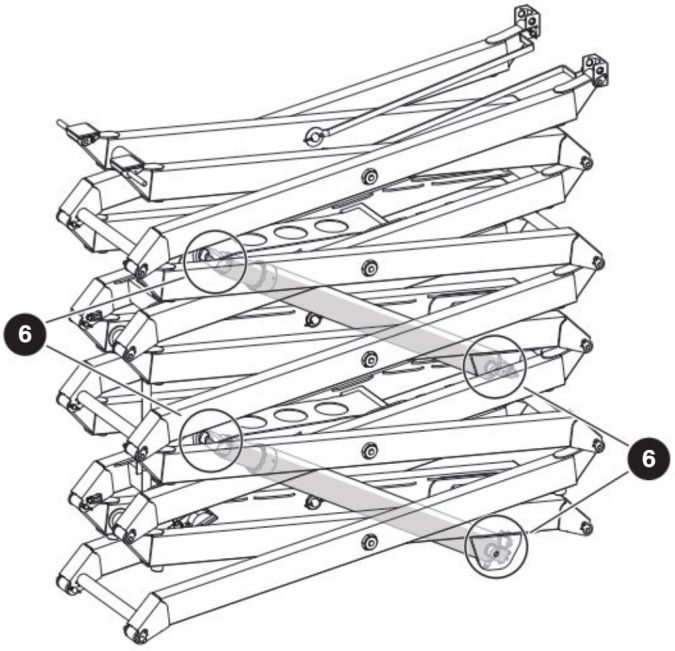

Upper cylinder mount area

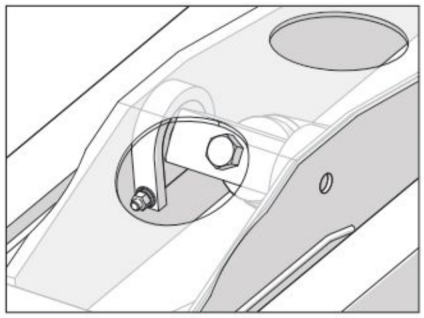

Lower cylinder mount area

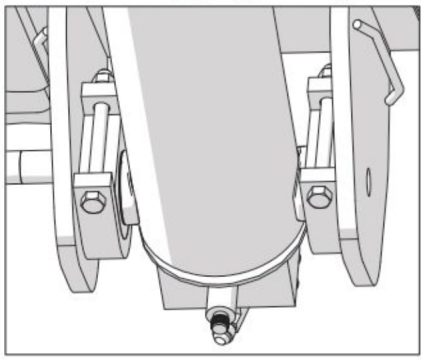

6 Cylinder mount inspection (B)

This inspection must be done as part of the scissor assembly inspection.

1. Do a structural inspection of the cylinder mount areas. Look for signs of damage to the mounts.

These signs can include:

- Broken, loose or missing retainers or bolts
- Bearing block degradation
- Cracks in welds or the surrounding metal, or rust forming in the area.

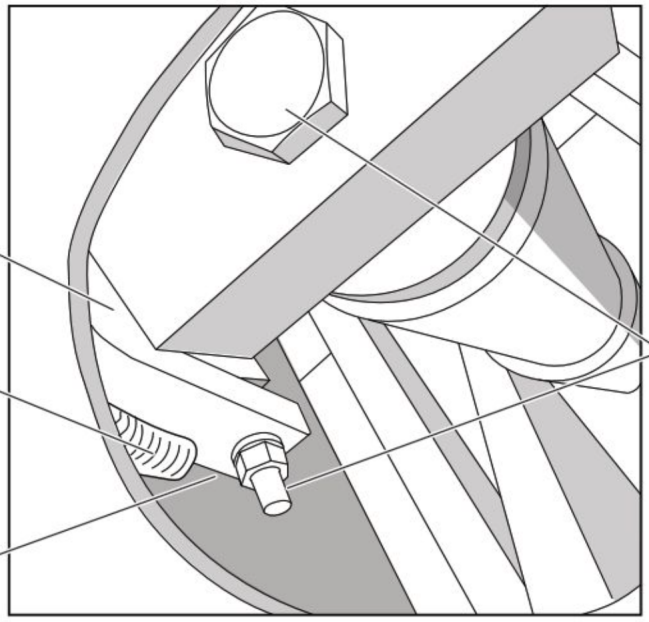

Overhead View

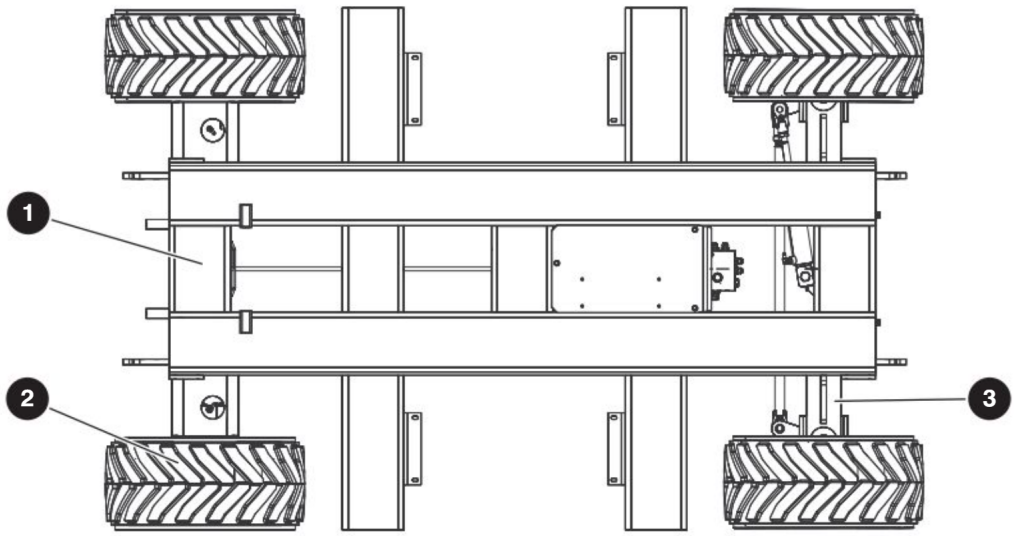

1.6-10 Base

1 Base Weldment (B)

- Ensure there are no visible cracks in welds or structure and there are no signs of deformation.

2 Wheel / Tire Assembly (B)

The MEWP / MEWP is either equipped with air tires or foam-filled tires. Tire failure, wheel failure or both could result if an MEWP tips over. Component damage may also result if problems are not discovered and repaired in a timely fashion.

⚠ WARNING

Risk of explosion causing death or serious injury. Do not over inflate tires.

⚠ WARNING

Air filled tires may not be permitted on some machines. Refer to 2.1 Specifications and Features**.**

- Check all tire treads and sidewalls for cuts, cracks, punctures and unusual wear.
- Check each wheel for damage and cracked welds.
- Check each lug nut for proper torque. Refer to 2.6 Torque Specifications.
- To maximize stability, it is essential to maintain proper pressure equally in all air-filled tires.
- Check each tire with an air pressure gauge and add air as needed.

Refer to 2.1 Specifications and Features

⚠ WARNING

Do not use tires other than those specified for this machine. Do not mix different types of tires. Tires other than those specified can adversely affect stability. Failure to operate with matched, approved tires in good condition can result in death or serious injury. Replace tires with the exact, Skyjack-approved types only.

3 Axles (B)

- Ensure axles are properly secured, and there are no loose or missing parts, all fittings and hoses are properly tightened and there is no evidence of hydraulic leakage.

Overhead View

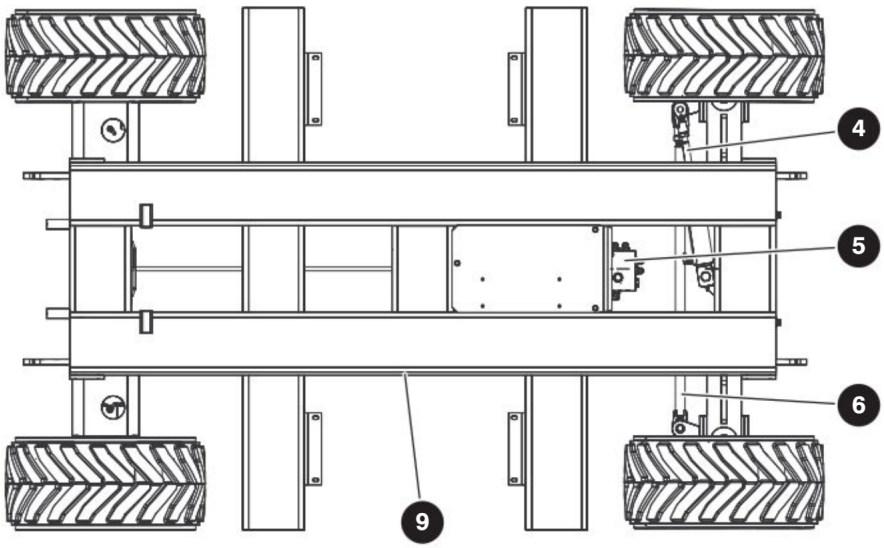

4 Steer Cylinder Assembly (B)

- Ensure steer cylinder assembly is properly secured, there are no loose or missing parts, all fittings and hoses are properly tightened and there is no evidence of hydraulic leakage.

5 Splitter Manifold (B, C)

- Ensure all fittings and hoses are properly tightened and there is no evidence of hydraulic leakage.
- Ensure there are no loose wire connections or missing fasteners.

6 Tie Rod (B)

- Ensure there are no loose or missing parts, tie rod end studs are locked and there is no visible damage.

7 Ladder (B)

- Ensure there are no loose or missing parts and there is no visible damage.

8 Outriggers (If Equipped) (B)

- Ensure there are no loose or missing parts and there is no visible damage.

9 Emergency Lowering Access Rod (B)

- Ensure rod is properly secured and there is no visible damage.

1.7 Function Tests

⚠ WARNING

Avoid hazardous situations. Never use a malfunctioning MEWP. If malfunctions are discovered, tag the machine and take it out of service. Have repairs made by a qualified service technician.

Function Tests are designed to discover any malfunctions before the aerial platform is put into service. The operator must understand and follow step-by-step instructions to test all aerial platform functions.

Prior to performing function tests, be sure to read and understand the Start Operation section of the Operator's Manual.

Refer to the Operator's Manual for a list of function tests. These instructions detail which tests must be performed, as well as how to properly and safely perform them.

After repairs are completed, the operator must perform a pre-operation inspection and a series of function tests again before putting aerial platform into service.

Notes

Section 2 – Specifications

2.1 Specifications and Features

Model		SJ6826 RT		SJ6832 RT	
Weight*		3330 kg	7375 lb.	3680 kg	8125 lb.
Width		1.73 m	68 in.	1.73 m	68 in.
Length		3.35 m	132 in.	3.35 m	132 in.
Platform Size		1.4 m x 2.4 m	56 in. x 96 in.	1.4 m x 2.4 m	56 in. x 96 in.
Height	Working	9.8 m	32 ft.	11.7 m	38 ft.
	Platform Elevated	8.0 m	26 ft.	9.8 m	32 ft.
	Platform Lowered	2.37 m	7.8 ft.	2.51 m	8.25 ft.
	Drive	8.0 m	26 ft.	9.8 m	32 ft.
Speed	Normal Drive	6.3 km/h	4 mph	6.3 km/h	4 mph
	Elevated Drive	0.63 km/h	0.39 mph	0.63 km/h	0.39 mph
	Lift (Rated Load)	36 sec		39 sec	
	Lower (Rated Load)	36 sec		36 sec	
Engine (RPM)	Kubota Diesel	3500 (High Throttle) / 2050 (Low Throttle)			
Tires	Foam-filled	OTR Outrigger - 26 x 12			
Sound Pressure (2000/14/EC Annex III)		96 dB(A)			
Gradeability (Torque Equivalent To)		50%		40%	

**Weights are approximate; refer to serial nameplate for specific weight.*

1500AA

2.2 Floor Load Calculation

Locally Concentrated Pressure (LCP):

Foot Print Area = Tread Contact Area

$$LCP = \frac{\text{Maximum Wheel Load}}{\text{Foot Print Area}}$$

Overall Uniform Pressure (OUP):

Base Area = Length x Width

$$OUP = \frac{\text{Weight of Aerial Platform + Capacity}}{\text{Base Area}}$$

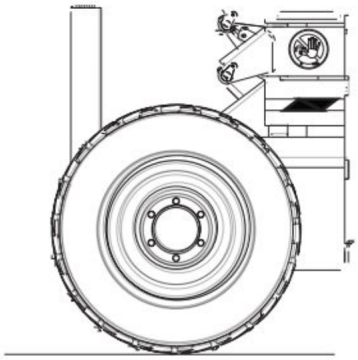

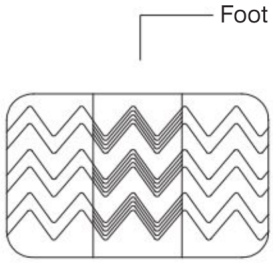

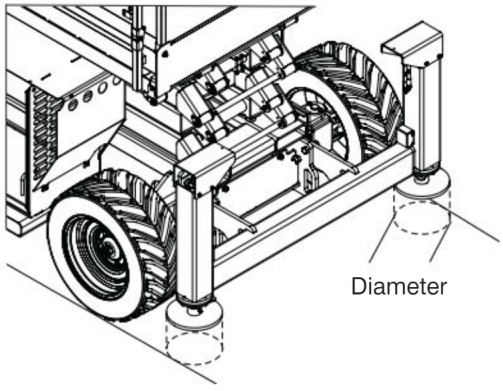

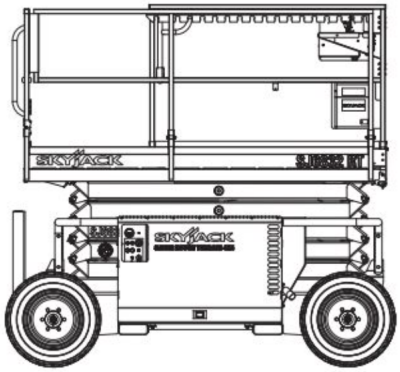

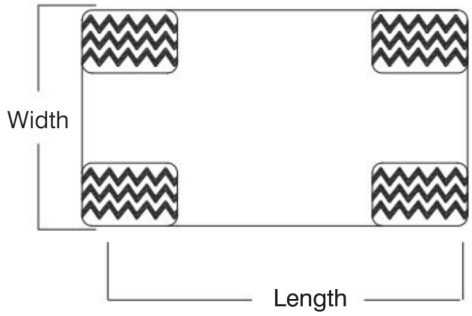

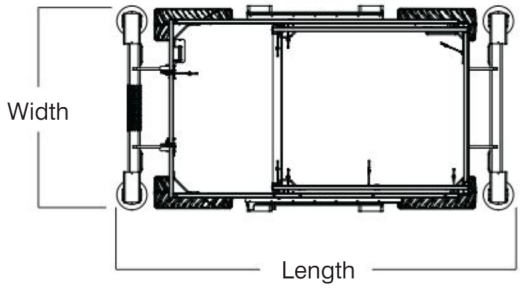

⚠ WARNING

Do not use tires other than those specified for this machine. Do not mix different types of tires. Tires other than those specified can adversely affect stability. Failure to operate with matched, approved tires in good condition can result in death or serious injury. Replace tires with the exact, Skyjack-approved types only.

2.4 Floor Loading Pressure

MODEL		Total Aerial Platform Weight	Total Aerial Platform Load		
			Wheel/ Outrigger Pad	LCP**	OUP**
		kg	kg	kPa	kg/m2
6826	min*	3305	1161	1046	1007
	max*	3960	1635	1159	1364
6832	min*	3655	1390	1114	1205
	max*	4189	1635	1179	1446
*	**min** - Total aerial platform weight with no options				
	max - Aerial platform weight + all options + full capacity				
**	**LCP** – Locally Concentrated Pressure is a measure of how hard the aerial platform presses on the areas in direct contact with the floor. The floor covering (tile, carpet, etc.) must be able to withstand more than the indicated values above.				
	OUP – Overall Uniform Pressure is a measure of the average load the aerial platform imparts on the whole surface directly underneath it. The structure of the operating surface (beams, etc.) must be able to withstand more than the indicated values above.				
NOTE: The **LCP** or **OUP** that an individual surface can withstand varies from structure to structure and is generally determined by the engineer or architect for that particular structure.					

1501AA

2.3 Maximum Platform Capacities

(Evenly distributed)

MODEL		Total		Extension		Maximum Side Force	Maximum Wind Speed	Tilt Cutout Setting (Degrees)	Tilt Cutout Setting (Outriggers) (Degrees)
		Capacity	kg	kPa	kg/m2				
6826	One Extension Platform	567 kg	4	136 kg	1	400N	12.5 m/s	2.5 x 4.5	1.5 x 1.5
6832	One Extension Platform	454 kg	2	136 kg	1	400N	12.5 m/s	2.5 x 4.5	1.5 x 1.5
			4				No Wind		
NOTE: Occupants and materials are not to exceed rated load. Refer to capacity label for additional information and for models equipped with options.									

2.5 Fluid Specifications

Hydraulic Oil				
Model	**Capacity (Liters)**	**Capacity (US Gallons)**	**Oil Type**	
SJ68XXRT	86.88	22.95	ATF Dexron III	
			Shell Naturelle HF-E 32 (Biodegradable)	
Engine Oil				
Engine Type	**Capacity (Liters)**	**Capacity (US Gallons)**	**Engine Oil Type**	**Recommended Equivalent Oil**
Kubota D902	3.9	1.03	SAE 10W-30	10W30 - API Service Designation CG-4, CF-4, CD, SH
Kubota D972	3.4	0.9		
Kubota WG 752				
Engine Coolant				
Engine Type	**Capacity (Liters)**	**Capacity (US Gallons)**	**Coolant Type**	
Kubota	3.1	0.82	Anti-freeze 50/50 Premix	
Engine Fuel				
Engine Type	**Capacity (Liters)**	**Capacity (US Gallons)**	**Fuel Type**	
Kubota D902	86.88	22.95	Diesel	
Kubota D972			Unleaded Gasoline	
Kubota WG 752				

1512AA

2.6 Torque Specifications

Cartridge						
	Size					
	8	38	58	10	12	16
Lb-ft (max)	20			25	35	50
Lb-in (max)	240			300	420	600
Nm (max)	27.12			33.9	47.46	67.8

Coils	
Torque	Size
	All coils
Lb-ft (max)	4 to 5
Lb-in (max)	48 to 60
Nm (max)	5.42 to 6.78

SAE Plugs								
Torque	Size							
	2	4	5	6	8	10	12	16
Lb-ft (max)	3	10	15		25		30	35
Lb-in (max)	36	120	180		300		360	420
Nm (max)	4.07	13.56	20.34		33.9		40.68	47.46

Bolts		
Type of Bolt	Torque (ft-lb)	Torque (Nm)
Directional valve mounting bolts	2.33 (28-32 in-lb)	3.16 - 3.61
Wheel mounting bolts	80	122
Wheel motor castle nut (front)	350	474.54
Wheel motor castle nut (back)	350	474.54
Center drive sprocket mounting bolts	110 - 115 (242 Loctite)	149 -156
Hydraulic drive motor mounting bolts (Front)	75	101
Hydraulic drive motor mounting bolts (Rear)	150	203
Positive battery post cable/fuse nut	7.5 (90 in-lb)	10.2
Newton-meter = Nm	Foot-Pound Force = ft-lb	Inch-Pound Force = in-lb

1504AA

2.7 Torque Specifications for Fasteners (Imperial)

Size	Torque Type	SAE2		SAE 5		SAE 8	
		Dry	Lubed	Dry	Lubed	Dry	Lubed
4-40	(in-lb)	(5)	(4)	(8)	(6)	(12)	(9)
	Nm	0.6	0.5	0.9	0.7	1.4	1.0
4-48	(in-lb)	(6)	(5)	(9)	(7)	(13)	(10)
	Nm	0.7	0.6	1.0	0.8	1.5	1.1
6-32	(in-lb)	(10)	(8)	(16)	(12)	(23)	(17)
	Nm	1.1	0.9	1.8	1.4	2.6	1.9
6-40	(in-lb)	(12)	(9)	(18)	(13)	(25)	(19)
	Nm	1.4	1.0	2.0	1.5	2.8	2.1
8-32	(in-lb)	(19)	(14)	(30)	(22)	(41)	(31)
	Nm	2.1	1.6	3.4	2.5	4.6	3.5
8-36	(in-lb)	(20)	(15)	(31)	(23)	(43)	(32)
	Nm	2.3	1.7	3.5	2.6	4.9	3.6
10-24	(in-lb)	(27)	(21)	(43)	(32)	(60)	(45)
	Nm	3.1	2.4	4.9	3.6	6.8	5.1
10-32	(in-lb)	(31)	(23)	(49)	(36)	(68)	(51)
	Nm	3.5	2.6	5.5	4.1	7.7	5.8
1/4-20	(in-lb) ft-lb	(66)	(50)	8	(75)	12	9
	Nm	7.5	5.6	11	8.5	16	12
1/4-28	(in-lb) ft-lb	(76)	(56)	10	(86)	14	10
	Nm	8.6	6.3	14	9.7	19	14
5/16-18	ft-lb	11	8	17	13	25	18
	Nm	15	11	23	18	34	24
5/16-24	ft-lb	12	9	19	14	25	20
	Nm	16	12	26	19	34	27
3/8-16	ft-lb	20	15	30	23	45	35
	Nm	27	20	41	31	61	47
3/8-24	ft-lb	23	17	35	25	50	35
	Nm	31	23	47	34	68	47
7/16-14	ft-lb	32	24	50	35	70	55
	Nm	43	33	68	47	95	75
7/16-20	ft-lb	36	27	55	40	80	60
	Nm	49	37	75	54	108	81
1/2-13	ft-lb	50	35	75	55	110	80
	Nm	68	47	102	75	149	108
1/2-20	ft-lb	55	40	90	65	120	90
	Nm	75	54	122	88	163	122

Size	Torque Type	SAE2		SAE 5		SAE 8	
		Dry	Lubed	Dry	Lubed	Dry	Lubed
9/16-12	ft-lb	70	55	110	80	150	110
	Nm	95	75	149	108	203	149
9/16-18	ft-lb	80	60	120	90	170	130
	Nm	108	81	163	122	230	176
5/8-11	ft-lb	100	75	150	110	220	170
	Nm	136	102	203	149	298	230
5/8-18	ft-lb	110	85	180	130	240	180
	Nm	149	115	244	176	325	244
3/4-10	ft-lb	175	130	260	200	380	280
	Nm	237	176	353	271	515	380
3/4-16	ft-lb	200	150	300	220	420	320
	Nm	271	203	407	298	569	434
7/8-9	ft-lb	170	125	430	320	600	460
	Nm	230	169	583	434	813	624
7/8-14	ft-lb	180	140	470	360	660	500
	Nm	244	190	637	488	895	678
1-8	ft-lb	250	190	640	480	900	680
	Nm	339	258	868	651	1220	922
1-12	ft-lb	270	210	710	530	1000	740
	Nm	366	285	963	719	1356	1003
1-14	ft-lb	280	210	730	540	1020	760
	Nm	380	285	990	732	1383	1030
1 1/8-7	ft-lb	350	270	800	600	1280	960
	Nm	475	366	1085	813	1735	1302
1 1/8-12	ft-lb	400	300	880	660	1440	1080
	Nm	542	407	1193	895	1952	1464
1 1/4-7	ft-lb	500	380	1120	840	1820	1360
	Nm	678	515	1519	1139	2468	1844
1 1/4-12	ft-lb	550	420	1240	920	2000	1500
	Nm	746	569	1681	1247	2712	2034
1 3/8-6	ft-lb	670	490	1460	1100	2380	1780
	Nm	908	664	1979	1491	3227	2413
1 3/8-12	ft-lb	750	560	1680	1260	2720	2040
	Nm	1017	759	2278	1708	3688	2766
1 1/2-6	ft-lb	870	650	1940	1460	3160	2360
	Nm	1180	881	2630	1979	4284	3200
1 1/2-12	ft-lb	980	730	2200	1640	3560	2660
	Nm	1329	990	2983	2224	4827	3606

NOTE: *Lubed includes lubricants such as lubrizing, oil, grease, or uncured Loctite.*

1374AA

2.8 Torque Specifications for Fasteners (Metric)

Size	Torque Type	8.8		10.9	
		Dry	Lubed	Dry	Lubed
M5 x 0.80	(in-lb)	(54)	(41)	(78)	(59)
	Nm	6.1	4.6	8.8	6.7
M6 x 1.00	(in-lb)	(92)	(69)	(133)	(99)
	Nm	10.4	7.8	15	11.2
M7 x 1.00	(in-lb)	(156)	(116)	(222)	(167)
	Nm	17.6	13.1	25.1	18.9
M8 x 1.25	(in-lb)	(225)	(169)	(333)	(242)
	Nm	25.4	19.1	37.6	27.3
M10 x 1.50	ft-lb	37	28	53	40
	Nm	50	38	72	54
M12 x 1.75	ft-lb	65	49	93	69
	Nm	88	66	126	94
M14 x 2.00	ft-lb	104	78	148	111
	Nm	141	106	201	150
M16 x 2.00	ft-lb	161	121	230	172
	Nm	218	164	312	233
M18 x 2.50	ft-lb	222	167	318	238
	Nm	301	226	431	323
M20 x 2.50	ft-lb	314	235	449	337
	Nm	426	319	609	457
M22 x 2.50	ft-lb	428	321	613	460
	Nm	580	435	831	624
M24 x 3.00	ft-lb	543	407	776	582
	Nm	736	552	1052	789
M27 x 3.00	ft-lb	796	597	1139	854
	Nm	1079	809	1544	1158
M30 x 3.50	ft-lb	1079	809	1543	1158
	Nm	1463	1097	2092	1570
M33 x 3.50	ft-lb	1468	1101	2101	1576
	Nm	1990	1493	2849	2137
M36 x 4.00	ft-lb	1886	1415	2699	2024
	Nm	2557	1918	3659	2744

NOTE: *Lubed includes lubricants such as lubrizing, oil, grease, or uncured Loctite.*

1375AB

2.9 Torque Specifications for Hydraulic Couplings & Hoses

Hydraulic Coupling Torque Chart
O-Ring Port Connectors

SAE Size	Steel Ports		Non-ferrous Ports	
	ft-lb	Nm	ft-lb	Nm
4	14-16	20-22	9-10	12-13
6	24-26	33-35	15-16	20-21
8	50-60	68-78	30-36	41-47
10	72-80	98-110	43-48	60-66
12	125-135	170-183	75-81	102-110
16	200-220	270-300	120-132	162-180
20	210-280	285-380	126-168	171-228
24	270-360	370-490	162-216	222-294
32	-	-	-	-

Hose End Torque Chart
for JIC

Size		Steel				Brass			
Dash	Frac.	ft-lb		Nm		ft-lb		Nm	
		Min.	Max.	Min.	Max.	Min.	Max.	Min.	Max.
-4	1/4"	10	11	13	15	5	6	6.75	9
-6	3/8"	17	19	23	26	12	15	17	20
-8	1/2"	34	38	47	52	20	24	27.66	33
-10	5/8"	50	56	69	76	34	40	46.33	55
-12	3/4"	70	78	96	106	53	60	72.33	82
-16	1"	94	104	127	141	74	82	100.5	111
-20	1 1/4"	124	138	169	188	75	83	101.5	113
-24	1 1/2	156	173	212	235	79	87	107	118
-32	2"	219	243	296	329	158	175	214	237

Hose End Torque Chart
for Flat-Face O-Ring Seal (Steel)

Size		Torque Specification			
Dash	Frac.	ft-lb		Nm	
		Min.	Max.	Min.	Max.
-4	1/4"	10	12	14	16
-6	3/8"	18	20	24	27
-8	1/2"	32	40	43	54
-10	5/8"	46	56	60	75
-12	3/4"	65	80	90	110
-14	1"	65	80	90	110
-16	1 1/4"	92	105	125	240
-20	1 1/2	125	140	170	190
-24	2"	150	180	200	245

1276AA

Section 3 – System Component Identification and Schematics

Table 3.1 Hydraulic Symbol Chart

LINE CROSSING	VARIABLE DISPLACEMENT PUMP	SHUTTLE VALV	VELOCITY FUSE
LINE JOINED	HAND PUMP	ACCUMULATOR, GAS CHARGED	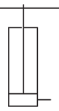 SINGLE ACTING CYLINDER
HYDRAULIC TANK	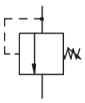 RELIEF VALVE	CUSHION CYLINDER	DOUBLE ACTING CYLINDER
HYDRAULIC FILTER WITH BYPASS	PRESSURE REDUCING VALVE	PRESSURE SWITCH	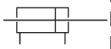 DOUBLE ACTING DOUBLE RODDED
ELECTRIC MOTOR	FIXED ORIFICE	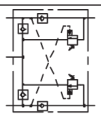 MOTION CONTROL VALVE	SPRING APPLIED HYDRAULIC RELEASED BRAKE
ENGINE	ADJUSTABLE FLOW CONTROL	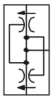 FLOW DIVIDER COMBINER	BRAKE CYLINDER
FIXED DISPLACEMENT PUMP	CHECK VALVE	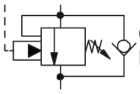 COUNTER BALANCE VALVE	ROTARY ACTUATOR
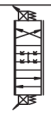 THREE POSITION FOUR WAY PROPORTIONAL	OIL COOLER	VALVE COIL	BI DIRECTIONAL HYDRAULIC MOTOR
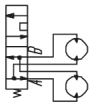 SERIES PARALLEL HYDRAULIC MOTOR	TWO POSITION TWO WAY NORMALLY CLOSED	TWO POSITION THREE WAY	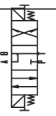 THREE POSITION FOUR WAY CLOSED CENTER OPEN PORT
TWO POSITION TWO WAY NORMALLY OPEN	TWO POSITION THREE WAY	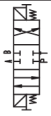 THREE POSITION FOUR WAY CLOSED CENTER CLOSED PORT	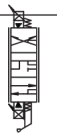 THREE POSITION FOUR WAY PROPORTIONAL
PRESSURE TRANSDUCER	MAIN LINES Solid	PILOT LINES Dashed	VARIABLE DISPLACEMENT HYDRAULIC MOTOR
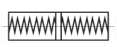 SERVO	QUICK DISCONNECT		

Table 3.2 Electrical Symbol Chart

WIRE CROSSING	HOURMETER	KEY SWITCH	ANGLE TRANSDUCER
WIRES JOINED	LIGHT	FOOT SWITCH	PRESSURE TRANSDUCER
BATTERY	HYDRAULIC VALVE COIL	TOGGLE SWITCH	LIMIT SWITCH N.O.
GROUND	PROPORTIONAL HYDRAULIC VALVE COIL	PUSH BUTTON	LIMIT SWITCH N.O. HELD CLOSED
FUSE	ELECTRIC MOTOR	ROTARY SWITCH	LIMIT SWITCH N.C.
CIRCUIT BREAKER	HORN	LIMIT SWITCH	LIMIT SWITCH N.C. HELD OPEN
BATTERY CHARGE INDICATOR	EMERGENCY STOP BUTTON	CAM OPERATED LIMIT SWITCH	SILICON CONTROLLED RECTIFIER
CAPACITOR	RESISTOR	TILT SWITCH	PROXIMITY SWITCH
POTENTIOMETER	LEVEL SENSOR	SINGLE POLE SINGLE THROWN RELAY	PNP TRANSISTOR
SINGLE POLE DOUBLE THROW RELAY	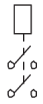 DOUBLE POLE SINGLE THROW RELAY	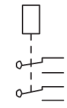 DOUBLE POLE DOUBLE THROW RELAY	NPN TRANSISTOR
TRIPLE POLE DOUBLE THROW RELAY	DIODE	TRANSISTOR	PRESSURE/ VACUUM SWITCH
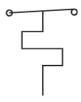 TEMPERATURE SWITCH			

3.3 AC Cord Color Code

(Battery Charger and Platform AC Outlet)

Standard Definition	NEC Colors	IEC Colors
Protective Ground/ Protective Earth	Green	Green-Yellow
Neutral	White	Blue
Line, Single Phase	Black	Black or Brown or Grey

Note: Standard colors referenced from IEC 60445:2010, Annex A: Table A.1

3.4 Hydraulic Schematic Parts List

Index No.	Skyjack Part No.	Description
C1	120989	CYLINDER, Lift (Lower)
C2	120989	CYLINDER, Lift (Upper)
C7	135896	CYLINDER, Steer
C8	107752	CYLINDER, Cushion
C9	132694	CYLINDER, Outrigger (Front left)
C10	132694	CYLINDER, Outrigger (Front right)
C11	132694	CYLINDER, Outrigger (Rear right)
C12	132694	CYLINDER, Outrigger (Rear left)
CB1	137181	VALVE, Counterbalance (Main)
CB2	137181	VALVE, Counterbalance (Parallel)
CV1	104624	VALVE, Check
CV2	104624	VALVE, Check
CV3	104624	VALVE, Pilot check
CV4	104624	VALVE, Pilot check
CV5	104624	VALVE, Pilot check
CV6	104624	VALVE, Pilot check
CV7	104115	VALVE, Pilot check
CV8	104115	VALVE, Pilot check
CV9	104115	VALVE, Pilot check
CV10	104115	VALVE, Pilot check
F1	136405	FILTER ASSEMBLY
FD1	137185	VALVE, Flow divider
HP2	110652	PUMP, Brake hand
2H-13	103655	VALVE, Control (Lowering)
2H-13-1	107269	VALVE, Holding (Lower cylinder)
2H-13-2	107269	VALVE, Holding (Upper cylinder)
2H-17A	114365	VALVE, Control (Large pump dump)
2H-17C	103655	VALVE, Holding (Outrigger)
2H-18B	103656	VALVE, Control (Small pump dump)
2H-20B	111937	VALVE, Control (High speed)
2H-86D	103655	VALVE, Control (Hydraulic generator)
3H-14A	106273	VALVE, Control (Lift)
3H-30	103623	VALVE, Control (Brake)
4H-15A	139256	VALVE, Control (Reverse drive)
4H-15B	128318	VALVE, Control (Parallel reverse drive)
4H-16A	139256	VALVE, Control (Forward drive)
4H-16B	128318	VALVE, Control (Parallel forward drive)
4H-20A	139351	VALVE, Control (Series/Parallel)

Index No.	Skyjack Part No.	Description
4H-20A	139351	VALVE, Control (Series/Parallel)
4H-23	153336	VALVE, Control (Right steer)
4H-24	153336	VALVE, Control (Left steer)
4H-71	153336	VALVE, Control (Front left outrigger retract)
4H-72	153336	VALVE, Control (Front right outrigger retract)
4H-73	153336	VALVE, Control (Rear right outrigger retract)
4H-74	153336	VALVE, Control (Rear left outrigger retract)
4H-75	153336	VALVE, Control (Front left outrigger extend)
4H-76	153336	VALVE, Control (Extend outrigger right front)
4H-77	153336	VALVE, Control (Extend outrigger right rear)
4H-78	153336	VALVE, Control (Extend outrigger left rear)
MI	137479	MOTOR (Front left)
M2	137479	MOTOR (Front right)
M3	137480	MOTOR (Rear right)
M4	137480	MOTOR (Rear left)
MB1	137125	BLOCK, Manifold (Main)
MB2	139450	BLOCK, Manifold (Splitter)
MB3	106688	BLOCK, Manifold (Lower holding valve)
MB4	108778	BLOCK, Manifold (Upper holding valve)
MB5	139830	BLOCK, Manifold (Sandwich)
MB6	139450	BLOCK, Manifold (Splitter)
MB8	111970	BLOCK, Manifold (Outrigger)
MB9	146109	BLOCK, Manifold (Hydraulic generator)
O1	105281	ORIFICE (0.067 diameter)
O2	137510	ORIFICE, Lowering (0.106 diameter) (Model 6826RT)
	137509	ORIFICE, Lowering (0.089 diameter) (Model 6832RT)
O3	137510	ORIFICE, Lowering (0.106 diameter) (Model 6826RT)
	137509	ORIFICE, Lowering (0.089 diameter) (Model 6832RT)
O4	137508	ORIFICE, Brake (0.028 diameter)
P1	114201	PUMP, Dual hydraulic (0.671/ 0.366)
R1	104534	VALVE, Relief (System)
R2	104534	VALVE, Relief (Lift)
R3	106557	VALVE, Relief (Lift cylinder)
R4	106557	VALVE, Relief (Lift cylinder)
R5	104534	VALVE, Relief (Drive)
V1	107271	VALVE, Emergency lowering
V2	137182	VALVE, Freewheel
V6	113752	VALVE, Brake auto reset

3.5 Electrical Parts List

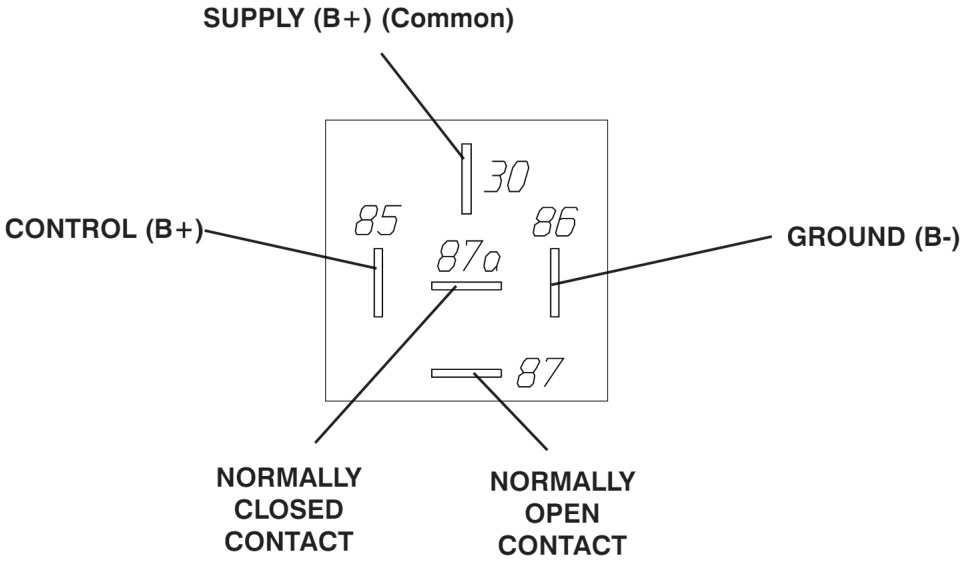

Index No.	Skyjack Part No.	Description
8CCR	127035	ENABLE RELAY
9CR2	127131	RELAY, 12 Volt (Outrigger enable)
9CR3	127131	RELAY, 12 Volt (Outrigger enable proof)
10BCR	127035	RELAY, 12 Volt (40 Amp) (main power)
10CR1	127035	RELAY, 12 Volt (40 Amp)
10CR2	127035	RELAY, 12 Volt (40 Amp)
15CR	127035	RELAY, 12 Volt (40 Amp) (Reverse drive)
16CR	127035	RELAY, 12 Volt (40 Amp) (Forward drive)
17CR	127035	RELAY, 12 Volt (40 Amp) (Small pump)
17DCR	127131	RELAY, 12 Volt (Outrigger lift disable)
19CR	127035	RELAY, 12 Volt (40 Amp) (Large pump)
20CR	127035	RELAY, 12 Volt (40 Amp) (Series/Parallel drive)
20ACR1	127035	RELAY, 12 Volt (40 Amp) (Series/Parallel)
20ACR2	127035	RELAY, 12 Volt (40 Amp) (Series/Parallel)
28ACR1	127035	RELAY, 12 Volt (40 Amp) (Small pump dump enable)
28ACR2	127035	RELAY, 12 Volt (40 Amp) (Large pump dump enable)
31CR	127035	RELAY, 12 Volt (40 Amp) (Glow plug)
32ACR	127035	CONTACTOR, Engine start
32CR1	127035	RELAY, 12 Volt (40 Amp)
32CR2	127035	RELAY, 12 Volt (40 Amp) (Engine start)

Index No.	Skyjack Part No.	Description
33CR	127035	RELAY, Power on-demand
34ACR	127035	RELAY, 12 Volt 40 Amp (Throttle)
35ACR	127035	RELAY, 12 Volt 40 Amp (Throttle enable)
35CR	127035	RELAY, 12 Volt 40 Amp (Elevation/High speed cutout)
61CR	127131	RELAY, 12 Volt 40 Amp (Outrigger drive enable)
65CR	127131	RELAY, 12 Volt (Outrigger lift enable)
86ACR	127035	RELAY, 12 Volt 40 Amp (Hydraulic generator stop)
86BCR	127035	RELAY, 12 Volt 40 Amp (Hydraulic generator latching)
86CCR	127035	RELAY, 12 Volt 40 Amp (Hydraulic generator)
2G-11	(Ref.)	SOLENOID, Gas shutoff (Kubota Dual Fuel Engine)
B1	103295	BATTERY, 12 Volt (Wet)
BP-29	103056	BEEPER (7.5 – 16 VDC)
CB1	137919	CIRCUIT BREAKER (25 Amp)
CB3	137919	CIRCUIT BREAKER (25 Amp)
CPS1	136172	SENSOR, Crankshaft position
CRD1	137355	CONTROL CABLE ASSEMBLY (Control console)
CRD2	137356	CONTROL CABLE ASSEMBLY (Scissor arm) (Model 6826RT)
	137363	CONTROL CABLE ASSEMBLY (Scissor arm) (Model 6832RT)
CRD3	137354	CONTROL CABLE ASSEMBLY (Electrical panel)
CS-31A	103007	Solenoid, Choke
DXX	102921	DIODE
EGP1	KUBOTA	PLUG, Engine glow
F1	128595	FUSE (300 Amp)
F4	138091	FUSE (125 Amp) (Electrical inverter option)
FL-22	121476	FLASHING LIGHT
FL-29	103743	FLASHER
FP	136119	PUMP, Electric fuel
GPL1	133133	LIGHT, Glow plug indicator
GPT1	137868	TIMER, Glow plug
H1	146652	HORN, 12 Volt
HTS-34C	103007	Solenoid, High throttle
ICM1	136121	MODULE, Igniter control
IG	137857	ALTERNATOR (Kubota DF902)
	136101	ALTERNATOR (Kubota DF972)
IGC1	136106	COIL, Ignition
IGC2	136106	COIL, Ignition
LED-1	137785	LIGHT, Power on
LED-2	137785	LIGHT, Power on (Base controls)

Index No.	Skyjack Part No.	Description
LS5	204234	LIMIT SWITCH (High drive cutout/tilt override)
LS61	207009	LIMIT SWITCH (Front left outrigger up)
LS62	207009	LIMIT SWITCH (Front right outrigger retracted)
LS63	207009	LIMIT SWITCH (Rear right outrigger retracted)
LS64	207009	LIMIT SWITCH (Rear left outrigger retracted)
LS65	207008	LIMIT SWITCH (Front left outrigger extended)
LS66	207008	LIMIT SWITCH (Front right outrigger extended)
LS67	207008	LIMIT SWITCH (Rear right outrigger extended)
LS68	207008	LIMIT SWITCH (Rear left outrigger extended)
OCM1	132804	MODULE, Outrigger auto-level control
OPS1	102838	SWITCH, Oil pressure
RST1	119629	RESISTOR, 2.7 kohm
S1	119726	SWITCH, Main power disconnect
S2	102853	BLOCK, N.O. contact (Up/down)
S3	-	SWITCH ASSEMBLY (Lift/Drive low/Drive)
	137793	• HEAD, Switch selector (3-Way)
	137788	• SWITCH ASSEMBLY (Base)
	137783	• • BLOCK, N.C. Contact
	137782	• • BLOCK, N.O. Contact
	137781	• • LATCH
S4	-	SWITCH ASSEMBLY (Emergency stop)
	137795	• SWITCH HEAD, Emergency Stop (Red)
	137791	• SWITCH ASSEMBLY (Base)
	137785	• • SWITCH, LED block (Red)
	137783	• • BLOCK, N.C. Contact
	137781	• • LATCH
S6	137790	SWITCH BASE ASSEMBLY (NC/LED, Red) (Base controls)
	137795	SWITCH ASSEMBLY (Emergency stop)
S7	132537	CONTROLLER ASSEMBLY (Drive/steer
S7-1	122869	• SWITCH W/ACTUATOR, 2nd Speed
S7-2	122877	• SWITCH, Right steer
S7-3	122877	• SWITCH, Left steer
S7-4	122869	• SWITCH W/ACTUATOR, Reverse drive
S7-5	122869	• SWITCH W/ACTUATOR, Forward drive
S7-6	122869	• SWITCH W/ACTUATOR, 3rd Speed
S7-7	122872	• SWITCH, Joystick enable
S8	-	SWITCH ASSEMBLY (Horn)
	137792	• SWITCH HEAD, Push button (Black)
	137786	• SWITCH ASSEMBLY (Base)
	137782	• • BLOCK, N.O. Spring contact
	137781	• • LATCH
S9A	102853	SWITCH, Outrigger Enable
S9B	127132	SWITCH, Outrigger enable
S10	133762	BLOCK, N.O. Contact (Platform/Idle/Base) (Base controls)

Index No.	Skyjack Part No.	Description
S14	-	SWITCH ASSEMBLY (Low/High throttle select)
	137794	• HEAD, Switch Selector (2-Way)
	137786	• SWITCH ASSEMBLY (Base)
	137782	• • BLOCK, N.O. Spring contact
	137781	• • LATCH
S15	-	SWITCH ASSEMBLY (Start)
	137792	• SWITCH HEAD, Push button (Black)
	137786	• SWITCH ASSEMBLY (Base)
	137782	• • BLOCK, N.O. Spring contact
	137781	• • LATCH
S20	102853	SWITCH, Toggle (Front left outrigger up/down)
S20A	127132	SWITCH, Front left outrigger rocker
S21	102853	SWITCH, Toggle (Front right outrigger up/down)
S21A	127132	SWITCH, Front right outrigger rocker
S22	102853	SWITCH, Toggle (Rear right outrigger up/down)
S22A	127132	SWITCH, Rear right outrigger rocker
S23	102853	SWITCH, Toggle (Rear left outrigger up/down)
S23A	127132	SWITCH, Rear left outrigger rocker
S24	102853	SWITCH, Auto-level outrigger
S31	102692	SWITCH, Engine glow plug
S32	102692	SWITCH, Engine start push button
S33	115747	SWITCH, Fuel select
TPS1	113400	SWITCH, Engine temperature
TS1	146661	TILT SWITCH
TT	195940	HOUR METER
2H-13	103613	COIL, 12 Volt (Lowering valve)
2H-13-1	103613	COIL, 12 Volt (Lower lift cylinder holding valve)
2H-13-2	103613	COIL, 12 Volt (Upper lift cylinder holding valve)
2H-17A	106272	COIL, 12 Volt (Large pump dump valve)
2H-17C	106272	COIL, 12 Volt (Holding outrigger valve)
2H-18B	103613	COIL, 12 Volt (Small pump dump valve)
2H-86D	103613	COIL, 12 Volt (Hydraulic generator)
2P-50-1	125793	SOLENOID, Propane lock off valve, vaporizer (Kubota Dual Fuel Engine)
3H-14A	106272	COIL, 12 Volt (Lift valve)
3H-30	103613	COIL, 12 Volt (Brake valve)
4H-15A	128321	COIL, 12 Volt (Reverse drive valve)
4H-15B	128321	COIL, 12 Volt (Parallel reverse drive valve)
4H-16A	128321	COIL, 12 Volt (Forward drive valve)
4H-16B	128321	COIL, 12 Volt (Parallel forward drive valve)
4H-20A	137513	COIL, 12 Volt (Series/Parallel drive)
4H-23	128321	COIL, 12 Volt (Right steer valve)

Index No.	Skyjack Part No.	Description
4H-24	128321	COIL, 12 Volt (Left steer valve)
4H-71	128321	COIL, 12 Volt (Front left outrigger retract)
4H-72	128321	COIL, 12 Volt (Front right outrigger retract)
4H-73	128321	COIL, 12 Volt (Rear right outrigger retract)
4H-74	128321	COIL, 12 Volt (Rear left outrigger retract)
4H-75	128321	COIL, 12 Volt (Front left outrigger extend)
4H-76	128321	COIL, 12 Volt (Front right outrigger extend)
4H-77	128321	COIL, 12 Volt (Rear right outrigger extend)
4H-78	128321	COIL, 12 Volt (Rear left outrigger extend)

3.6 Hydraulic Schematic S/N 37006450 and above

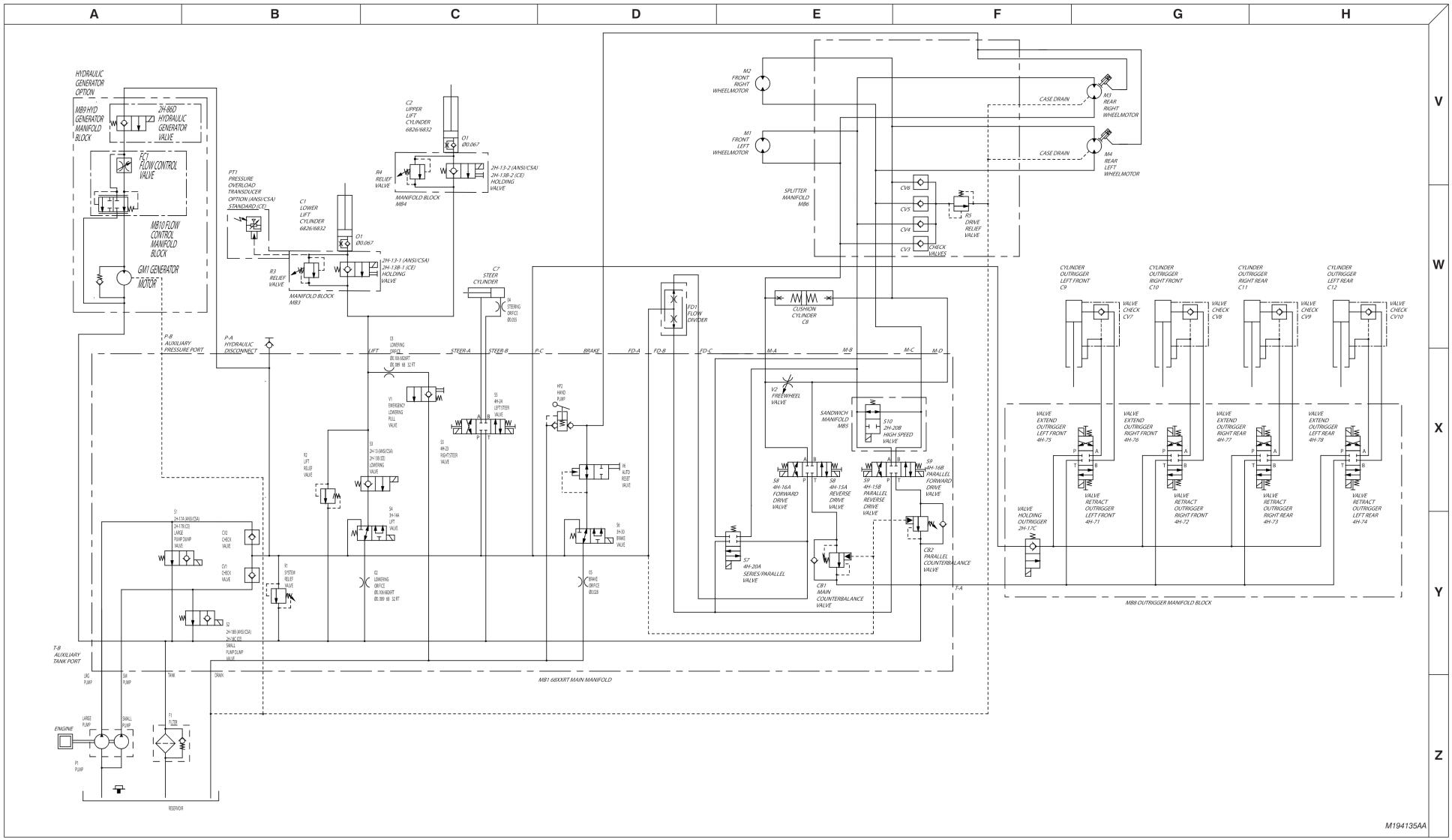

3.7 Hydraulic Schematic S/N 37006449 and below

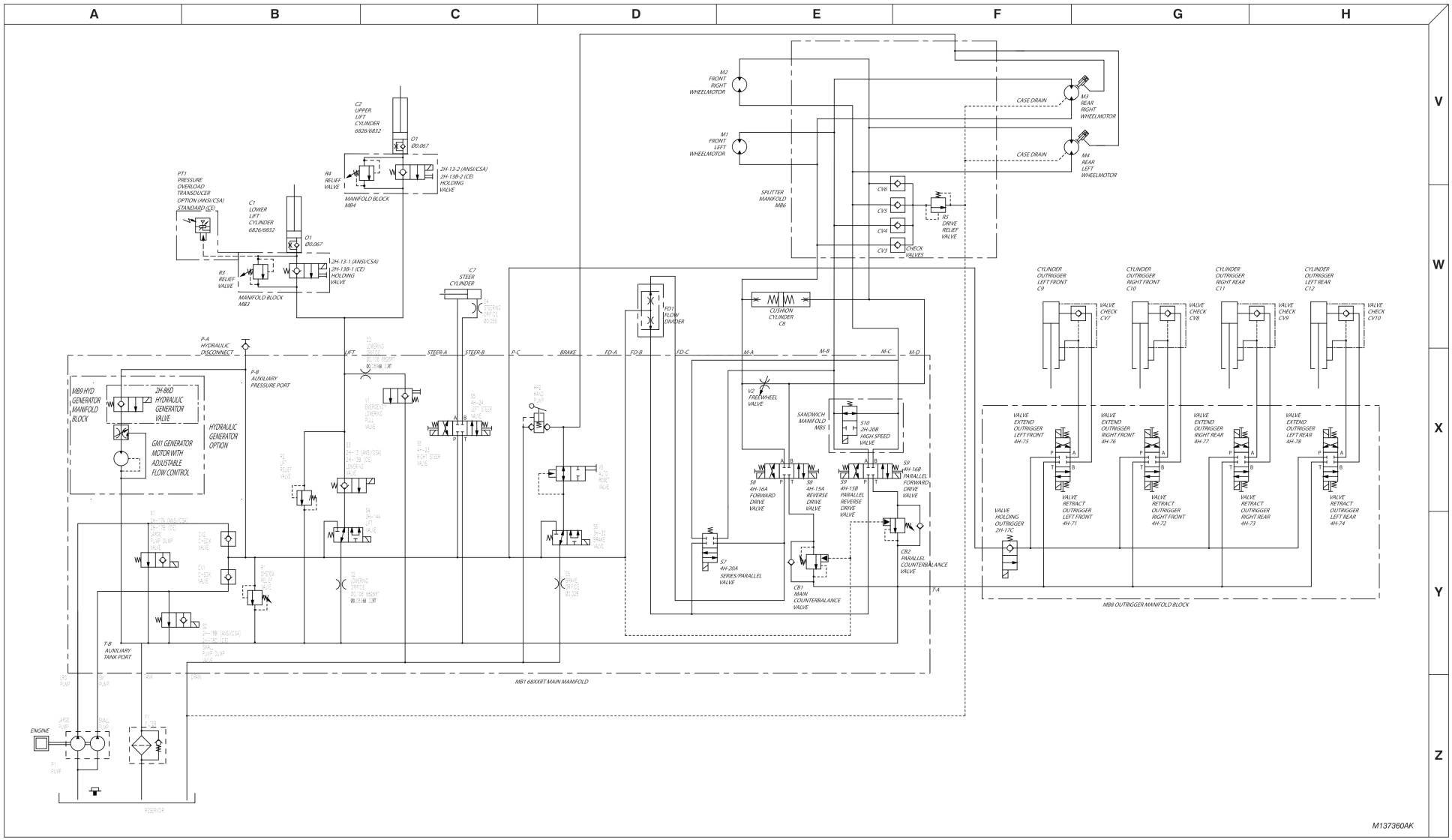

3.8 Hydraulic Manifold Valve Port Identification

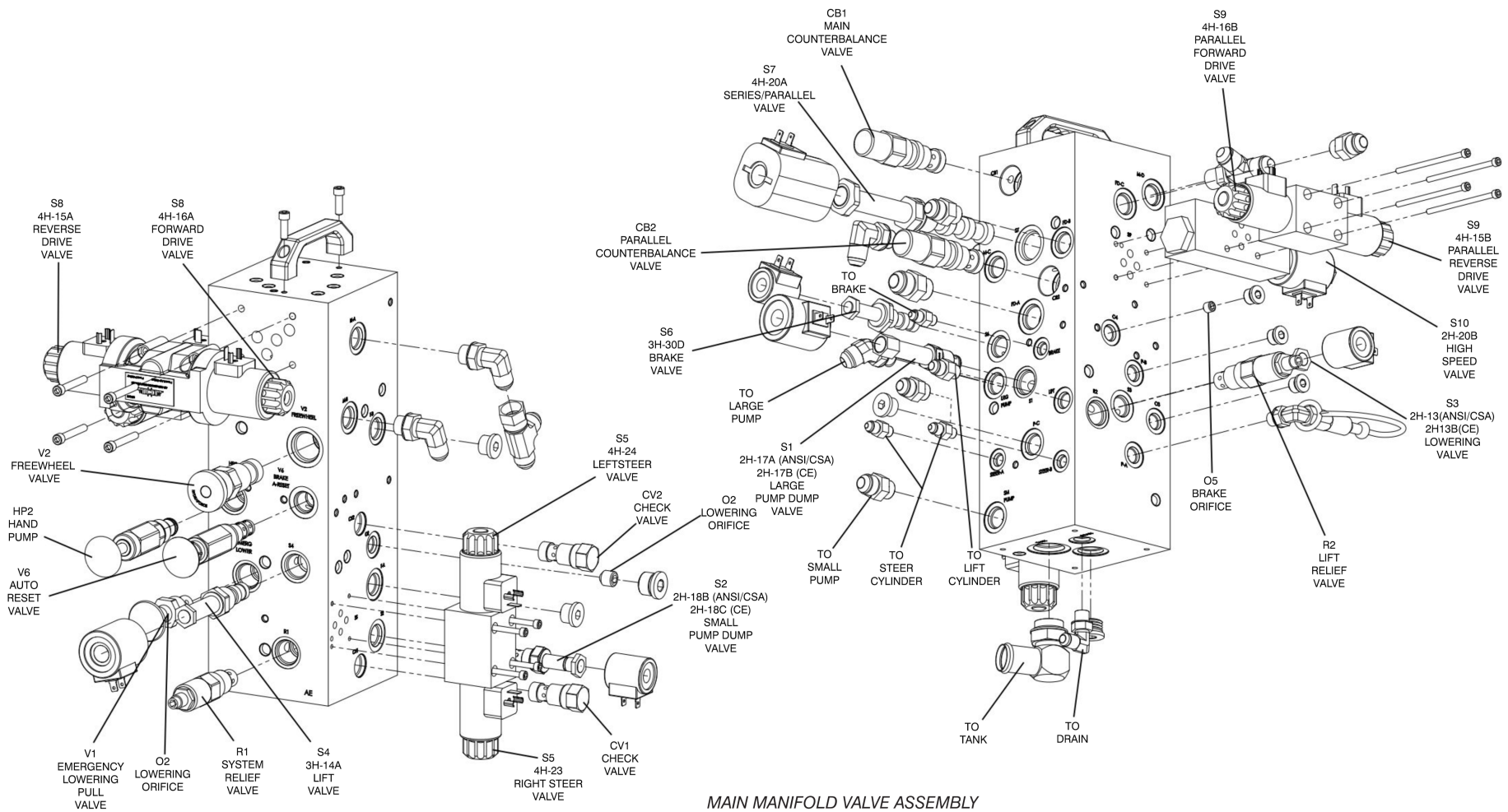

MAIN MANIFOLD VALVE ASSEMBLY

M137189AQ

3.9 Hydraulic Manifold Valve Assemblies and Port Identification

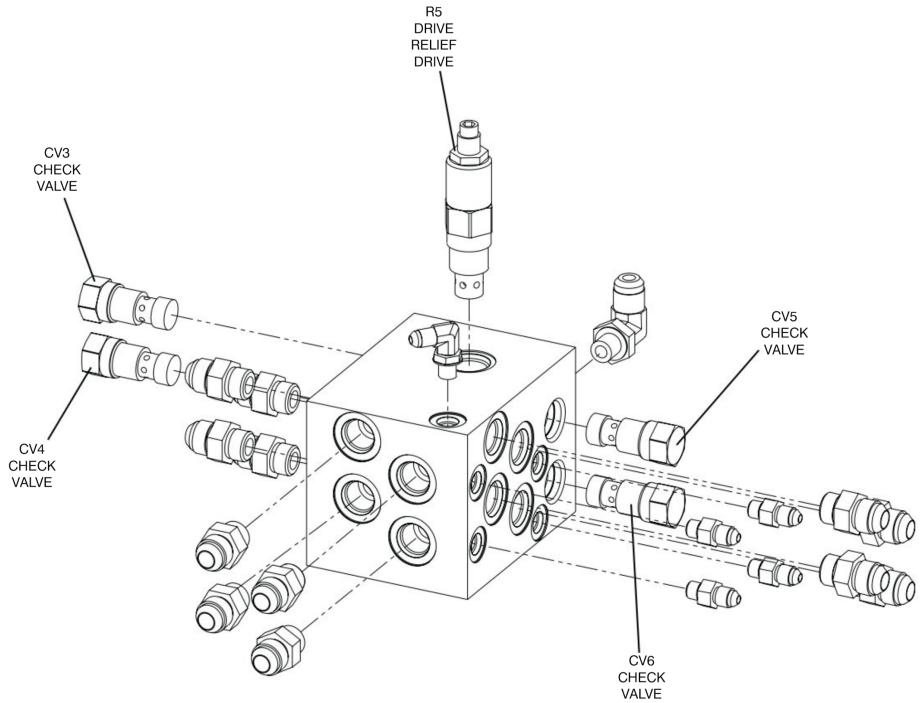

SPLITTER MANIFOLD VALVE ASSEMBLY

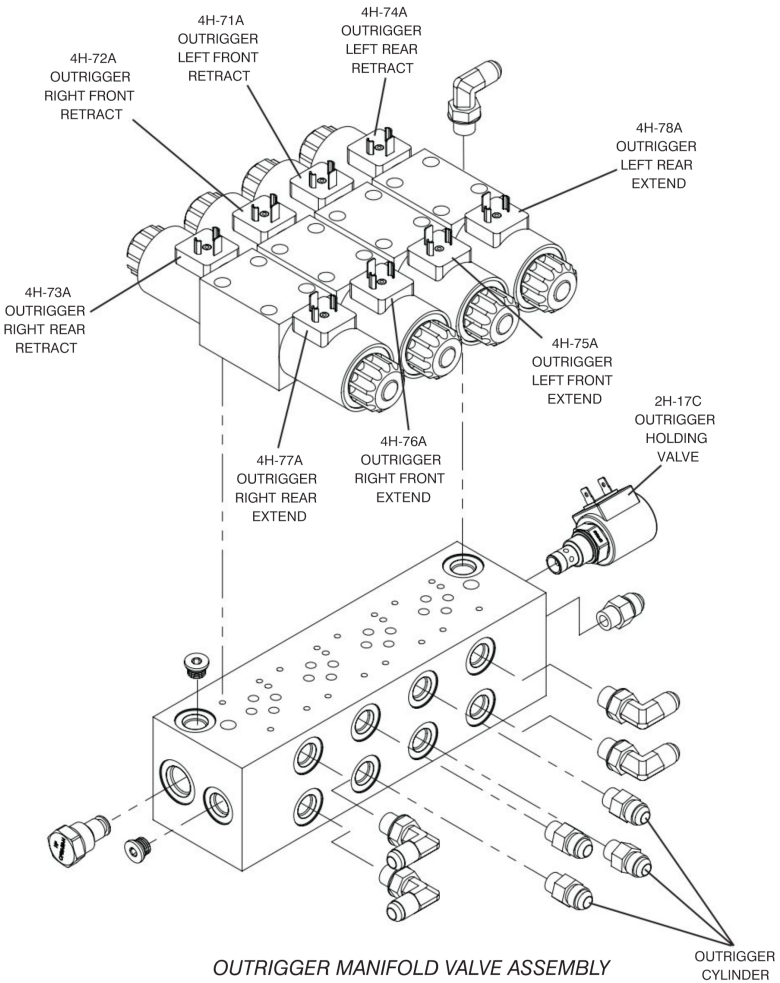

OUTRIGGER MANIFOLD VALVE ASSEMBLY

M138075AB_1
M138045AB_1

3.10 Control Box Wiring Diagram

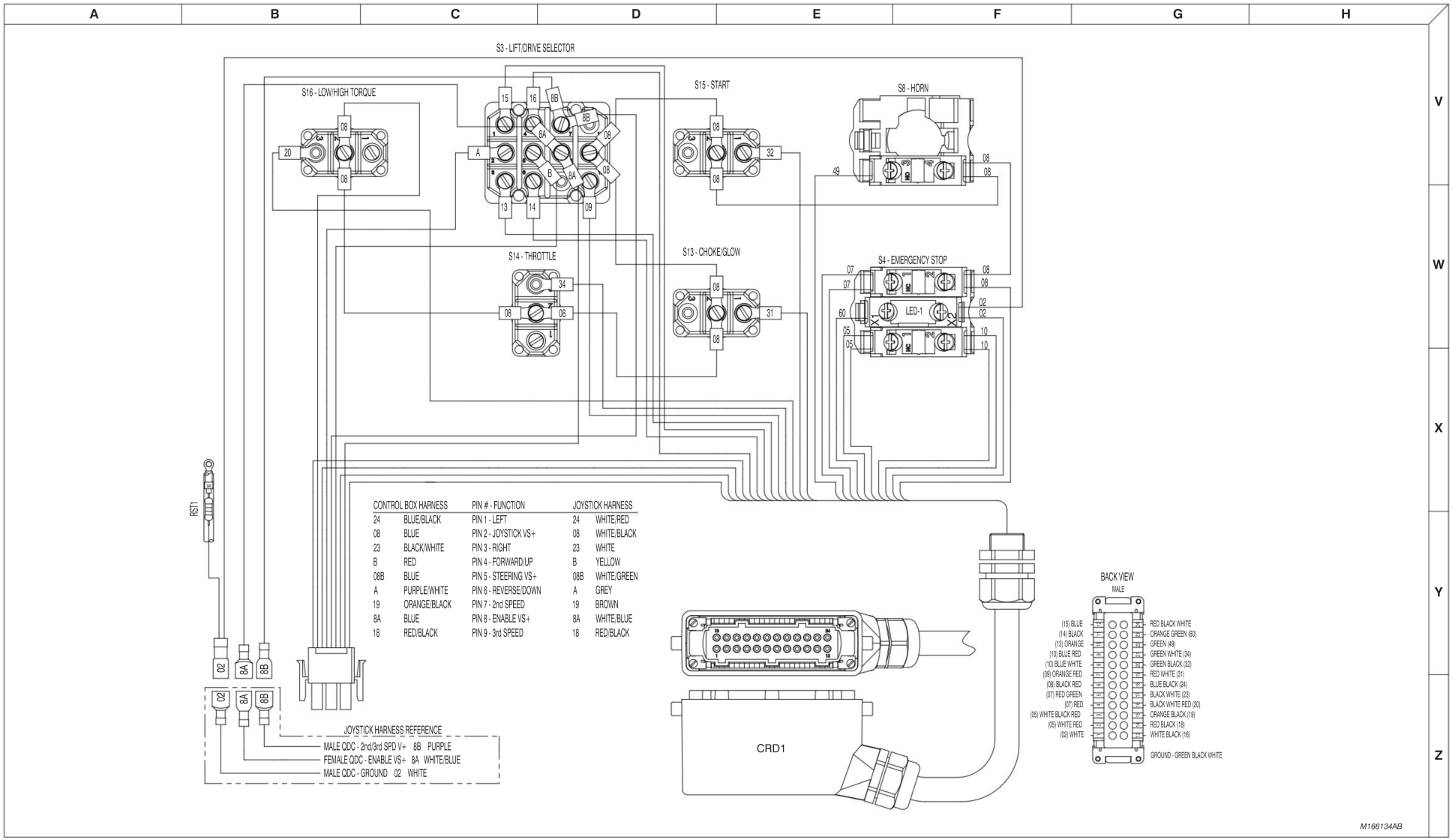

3.11 Outrigger / Hydraulic Generator Control Console Wiring Diagram

AD

A	B	C	D	E	F	G	H

V W X Y Z

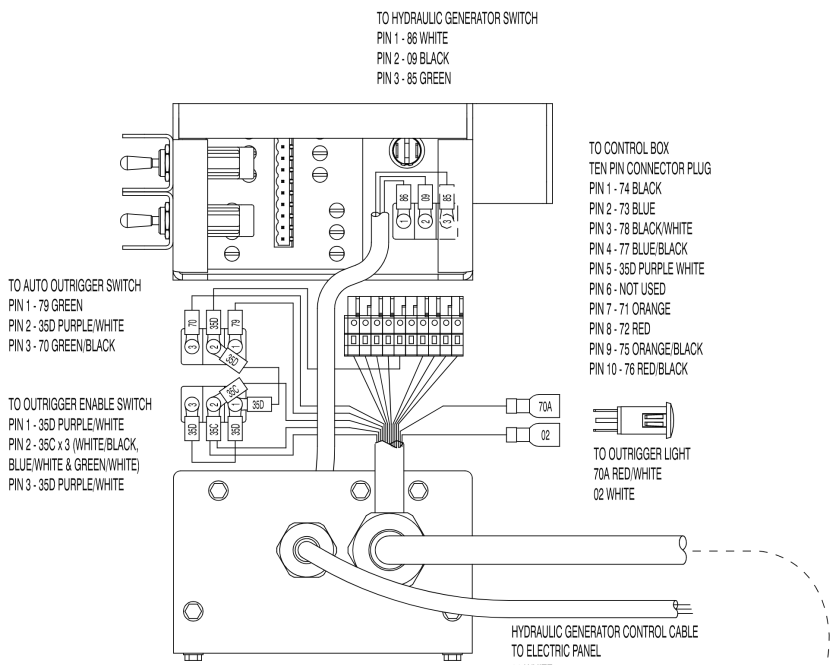

M129301AD

3.12 Scissor Arm Control Cable Wiring Diagram

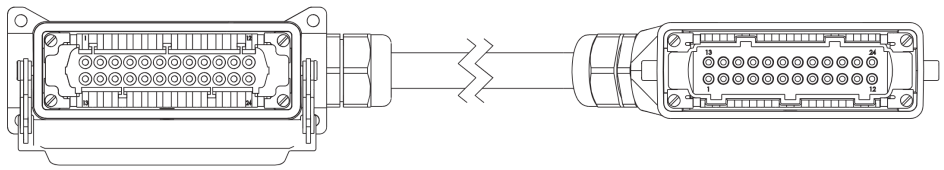

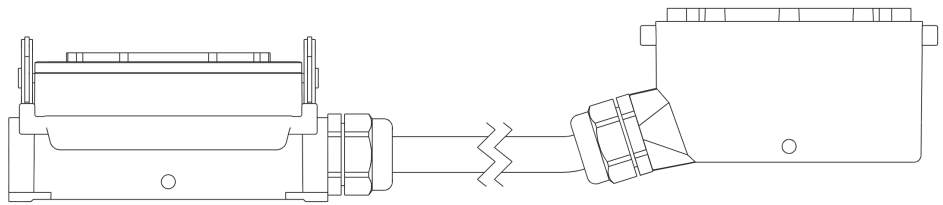

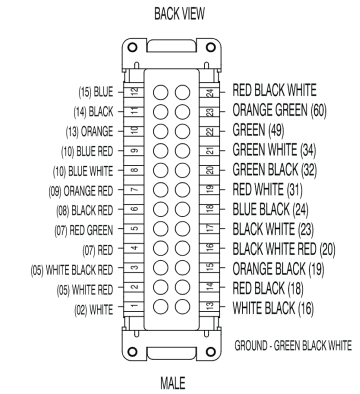

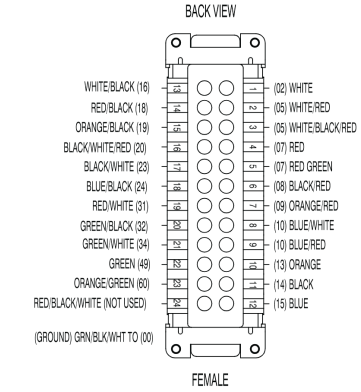

M137356AB

3.13 Main Manifold Valve Harness Wiring Diagram

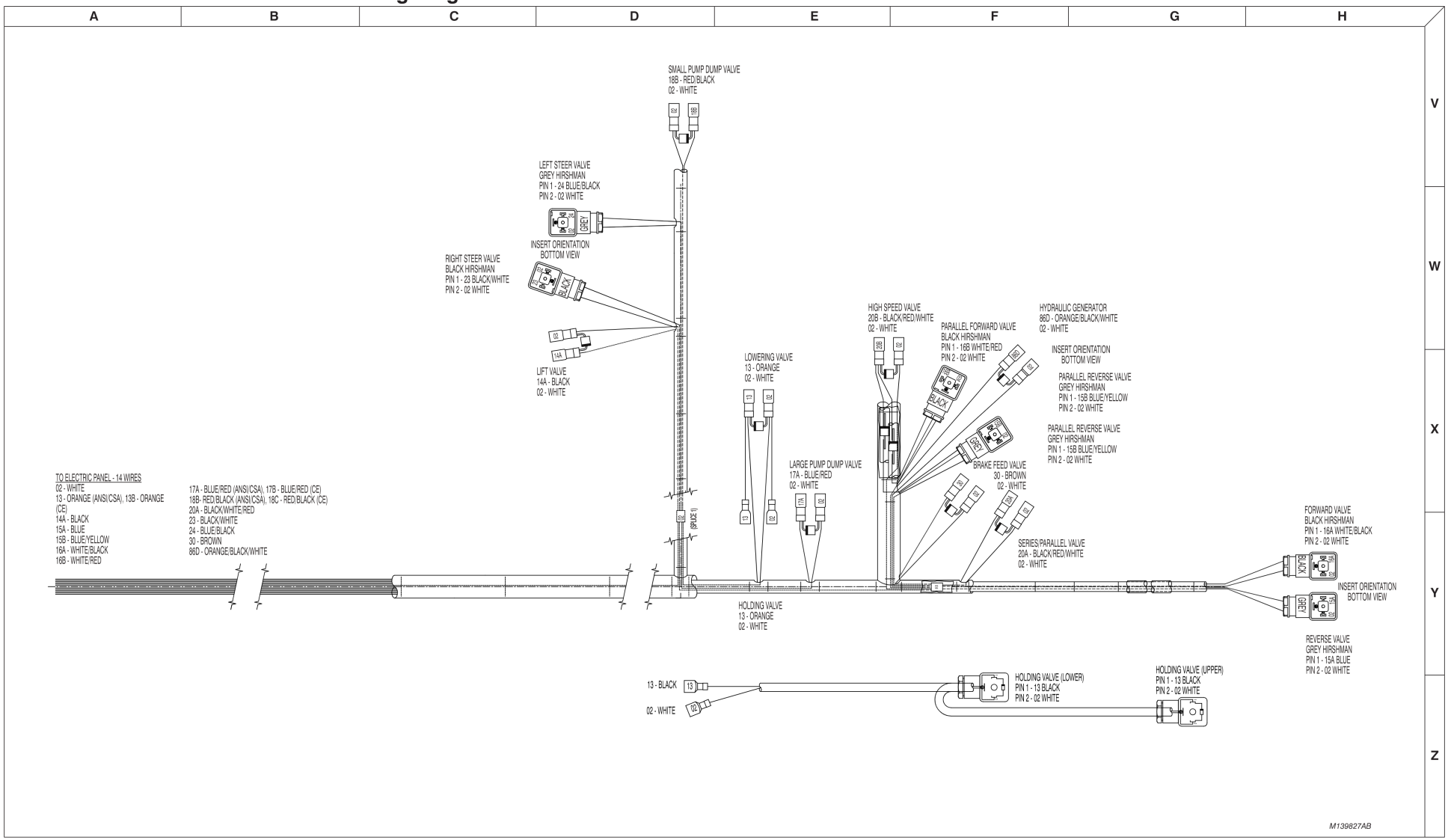

3.14 Kubota Engine Wiring Diagram – Dual Fuel System – S/N 37009728 and Below

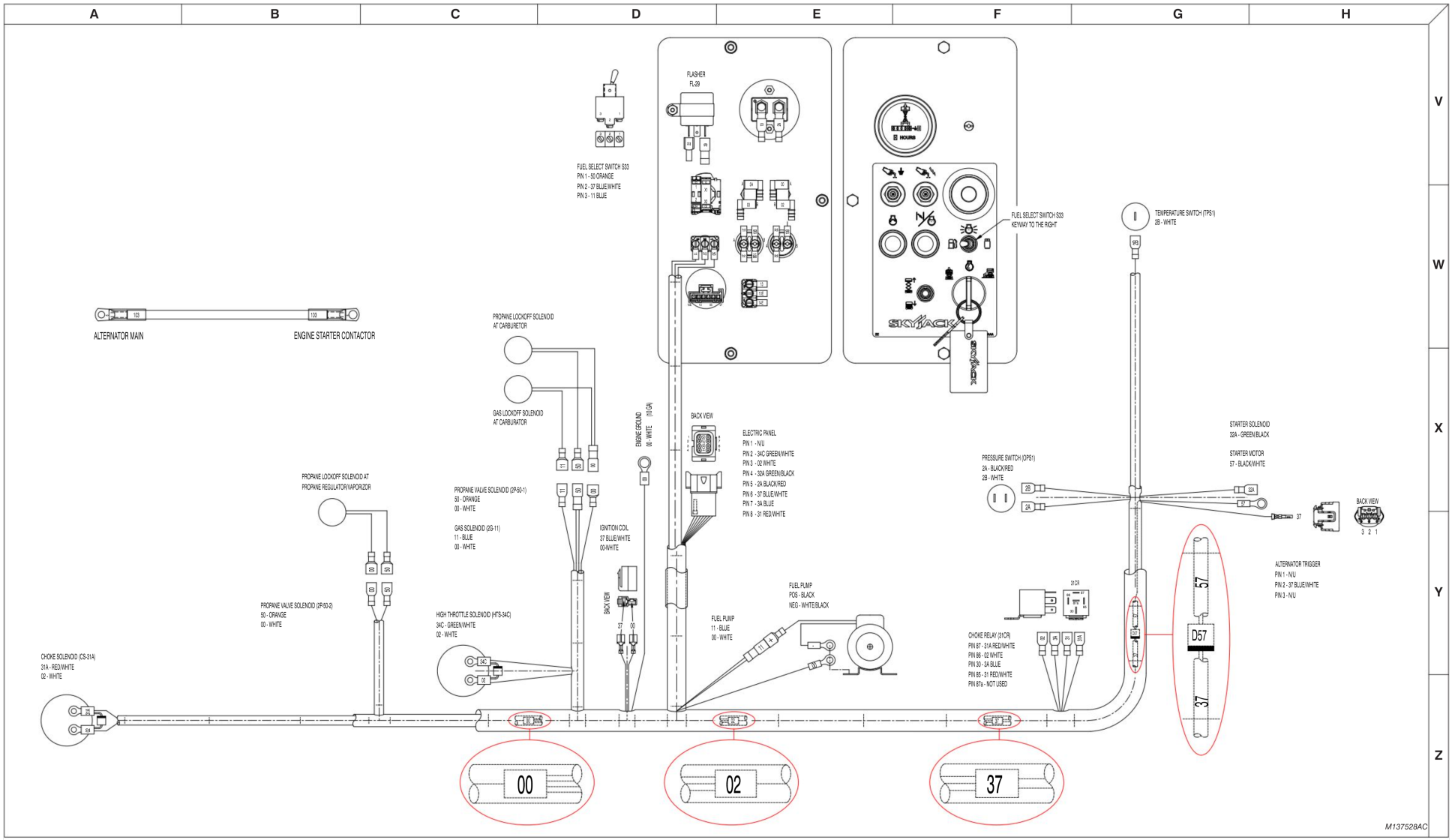

3.15 Kubota Engine Wiring Diagram – Dual Fuel System – S/N 37009729 and Above

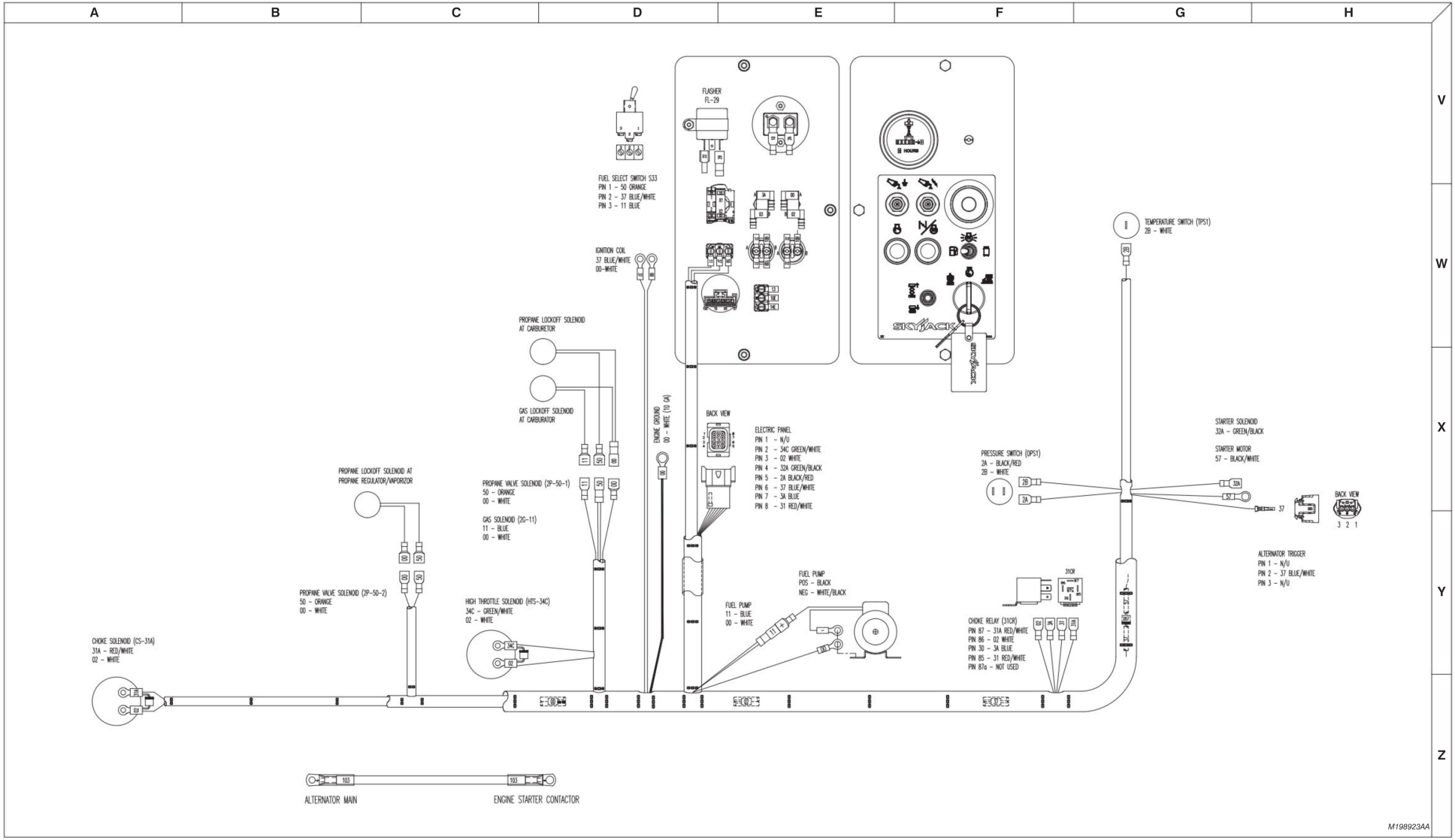

3.16 Kubota Engine Wiring Diagram (Diesel Fuel System)

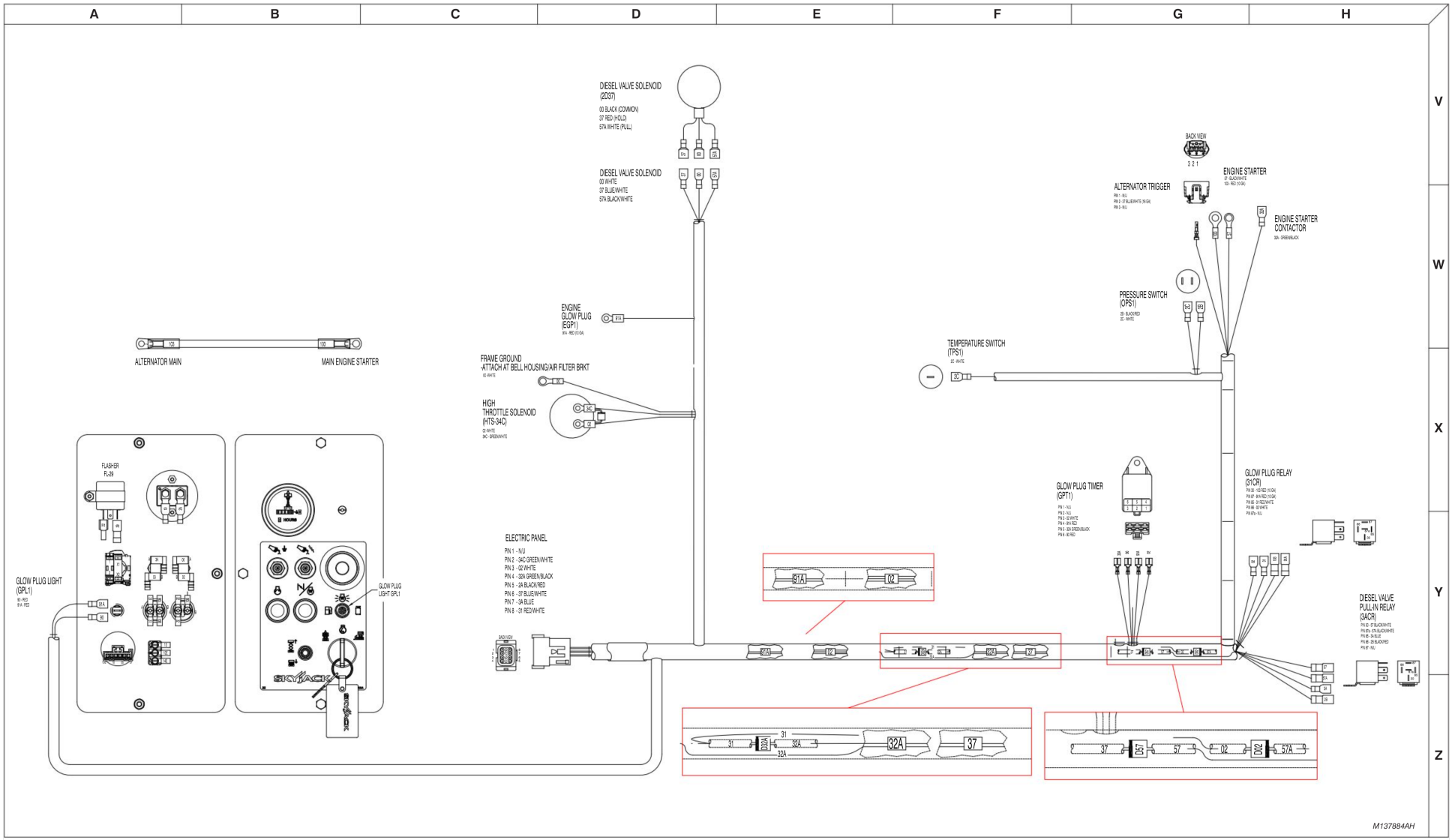

3.17 Outrigger Harness Wiring Diagram

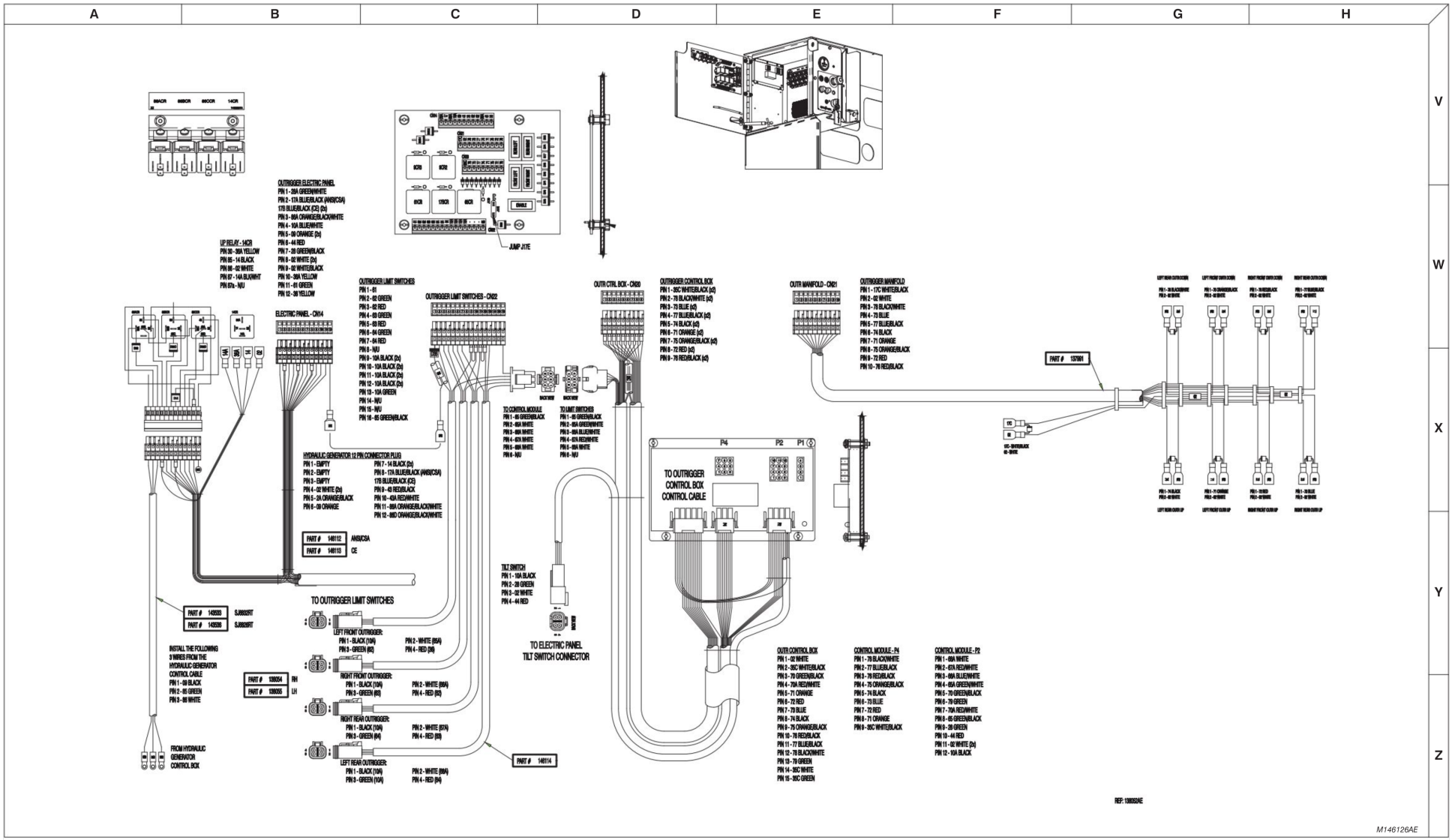

3.18 Hydraulic Generator Electrical Panel Assembly

A	B	C	D	E	F	G	H

WIRE#	86ACR - HYDRAULIC GENERATOR STOP RELAY
W3	PIN 85 - 86A ORANGE/BLACK/WHITE
W4	PIN 86 - 02 WHITE
W2	PIN 30 - 85 ORANGE/BLACK/WHITE
W9	PIN 87a - 86B ORANGE/BLACK/WHITE
-	PIN 87 - N/U

WIRE#	86BCR - HYDRAULIC GENERATOR LATCHING RELAY
W9	PIN 85 - 86B ORANGE/BLACK/WHITE
W5	PIN 86 - 2A ORANGE/BLACK
W1	PIN 30 - 09 ORANGE
-	PIN 87a - N/U
W2	PIN 87 - 86C ORANGE/BLACK/WHITE

WIRE#	86CCR - HYDRAULIC GENERATOR RELAY
W2	PIN 85 - 86C ORANGE/BLACK/WHITE
W4	PIN 86 - 02 WHITE
W7	PIN 30 - 43 RED/BLACK
W8	PIN 87a - 43A RED/WHITE
W6	PIN 87 - 86D ORANGE/BLACK/WHITE

WIRE#	HYDRAULIC GENERATOR 12 PIN CONNECTOR PLUG
W1	PIN 1 - 09 ORANGE
W2	PIN 2 - 85 ORANGE/BLACK/WHITE
W3	PIN 3 - 86 ORANGE/BLACK/WHITE
W4	PIN 4 - 02 WHITE
W5	PIN 5 - 2A ORANGE/BLACK
W1	PIN 6 - 09 ORANGE
W3	PIN 7 - 14 (DIODE)
W6	PIN 8 - 17AB BLUE/BLACK
W7	PIN 9 - 43 RED/BLACK
W8	PIN 10 - 43A RED/WHITE
W3	PIN 11 - 86A ORANGE/BLACK/WHITE
W6	PIN 12 - 86D ORANGE/BLACK/WHITE

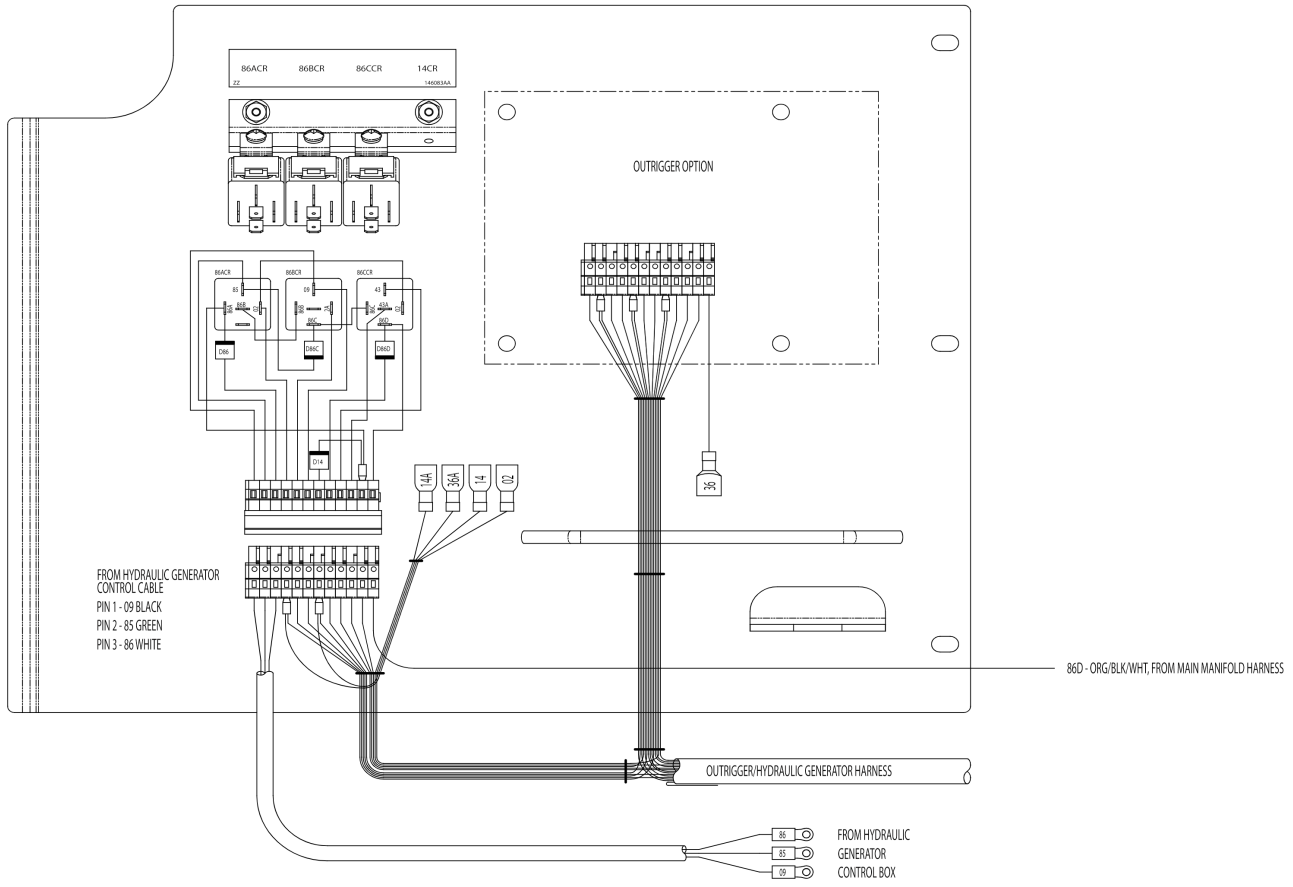

M146108AC_1

3.19 All Motion Alarm Electrical Panel Diagram

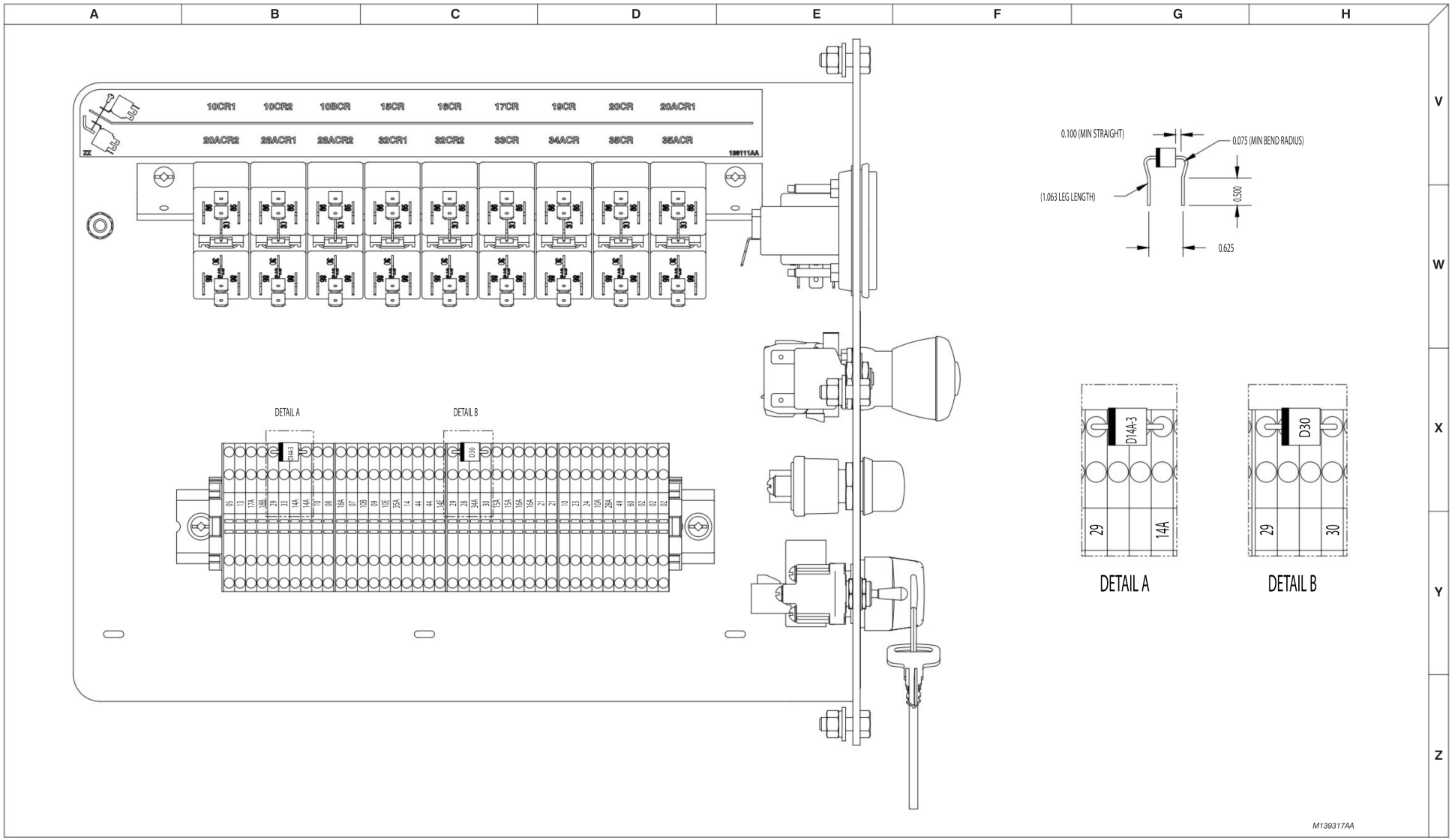

3.20 Telematics Harness Wiring Diagram

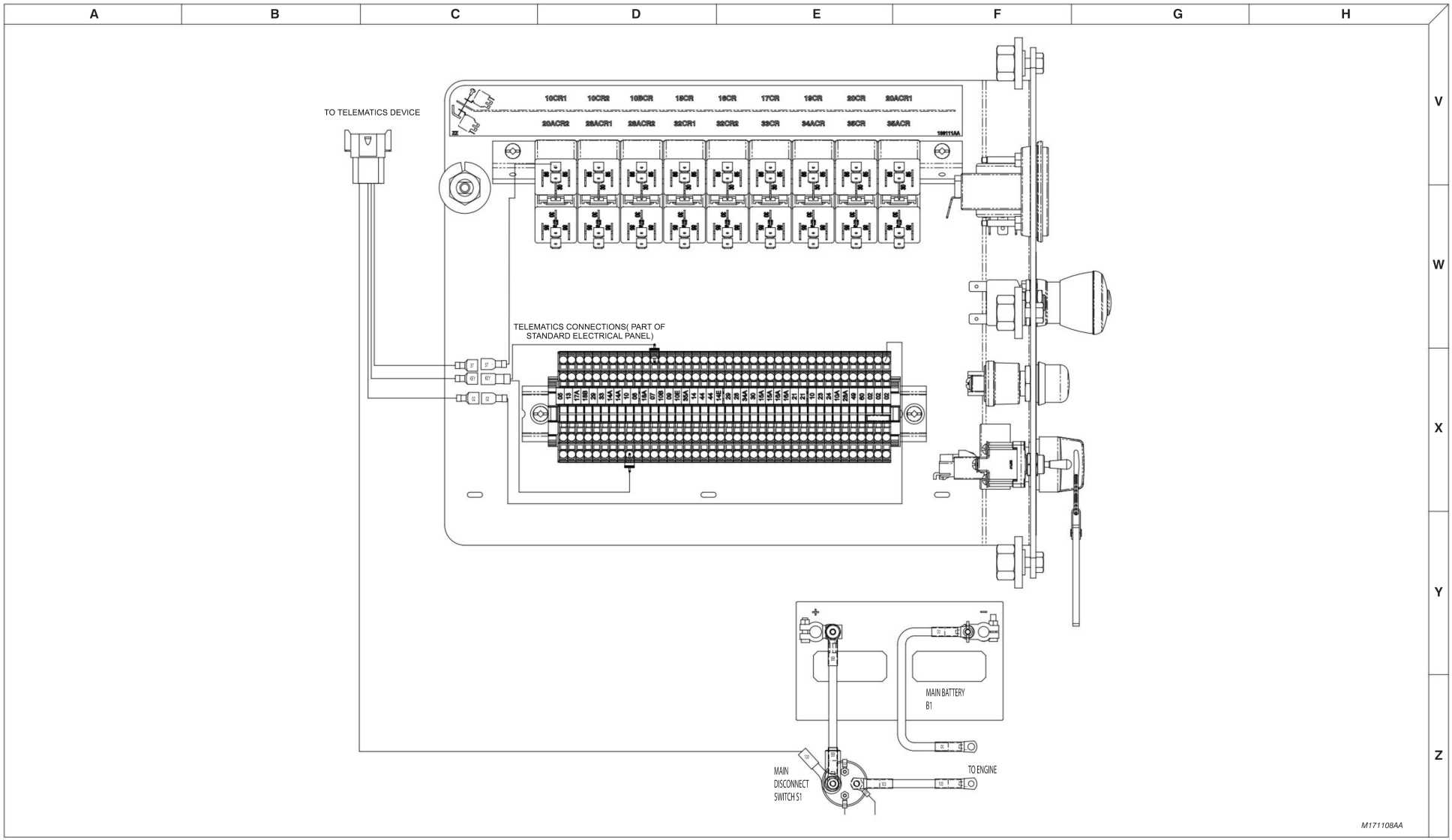

3.21 Electrical Panel Wiring Diagram S/N 37000235 and above

Serial Number Breakdown Reference Table	
Model	Serial Number
SJ68RT	37000235 and above

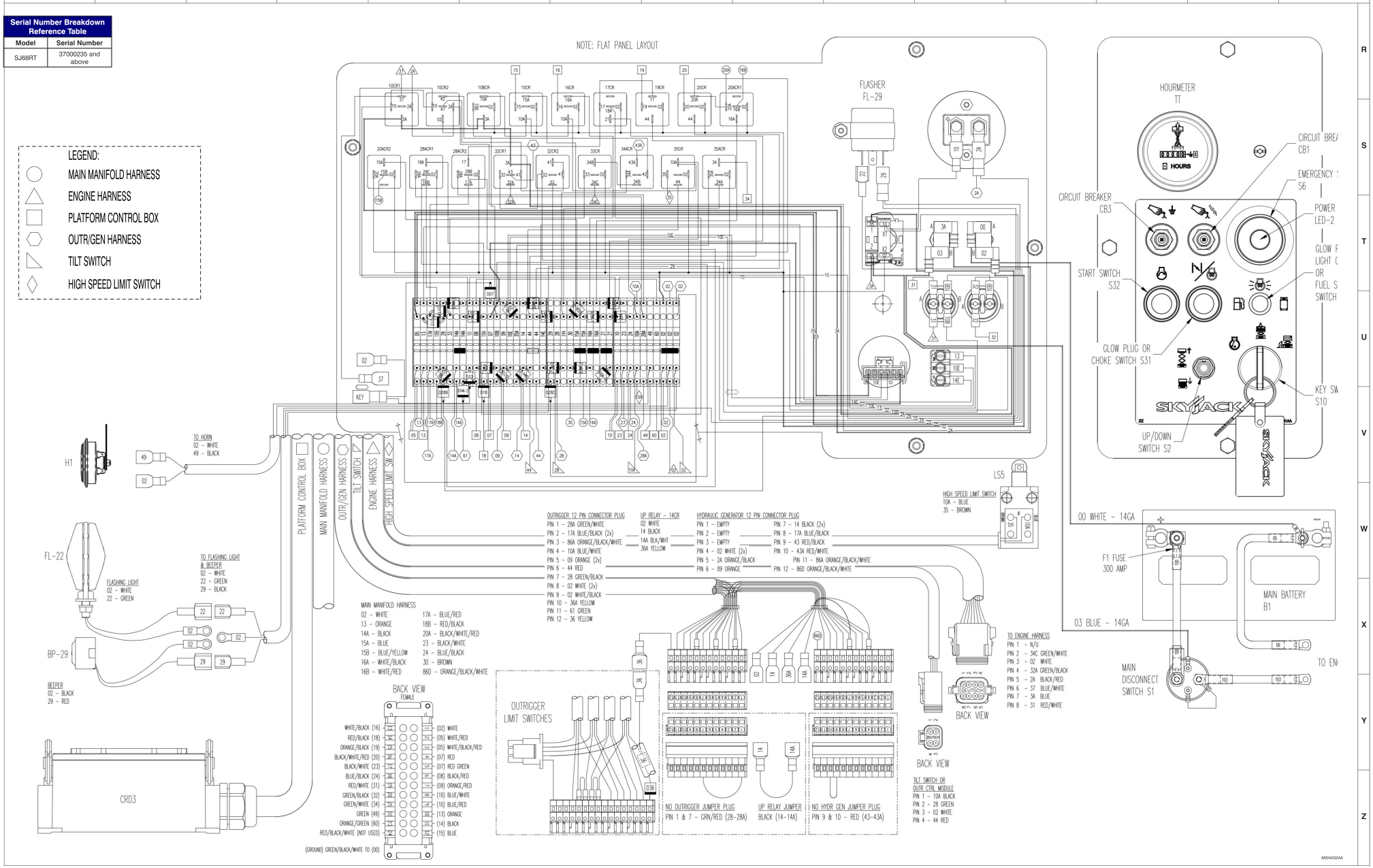

3.22 Electrical Panel Wiring Diagram S/N 37000234 and below

Serial Number Breakdown Reference Table	
Model	Serial Number
SJ68RT	37000234 and below

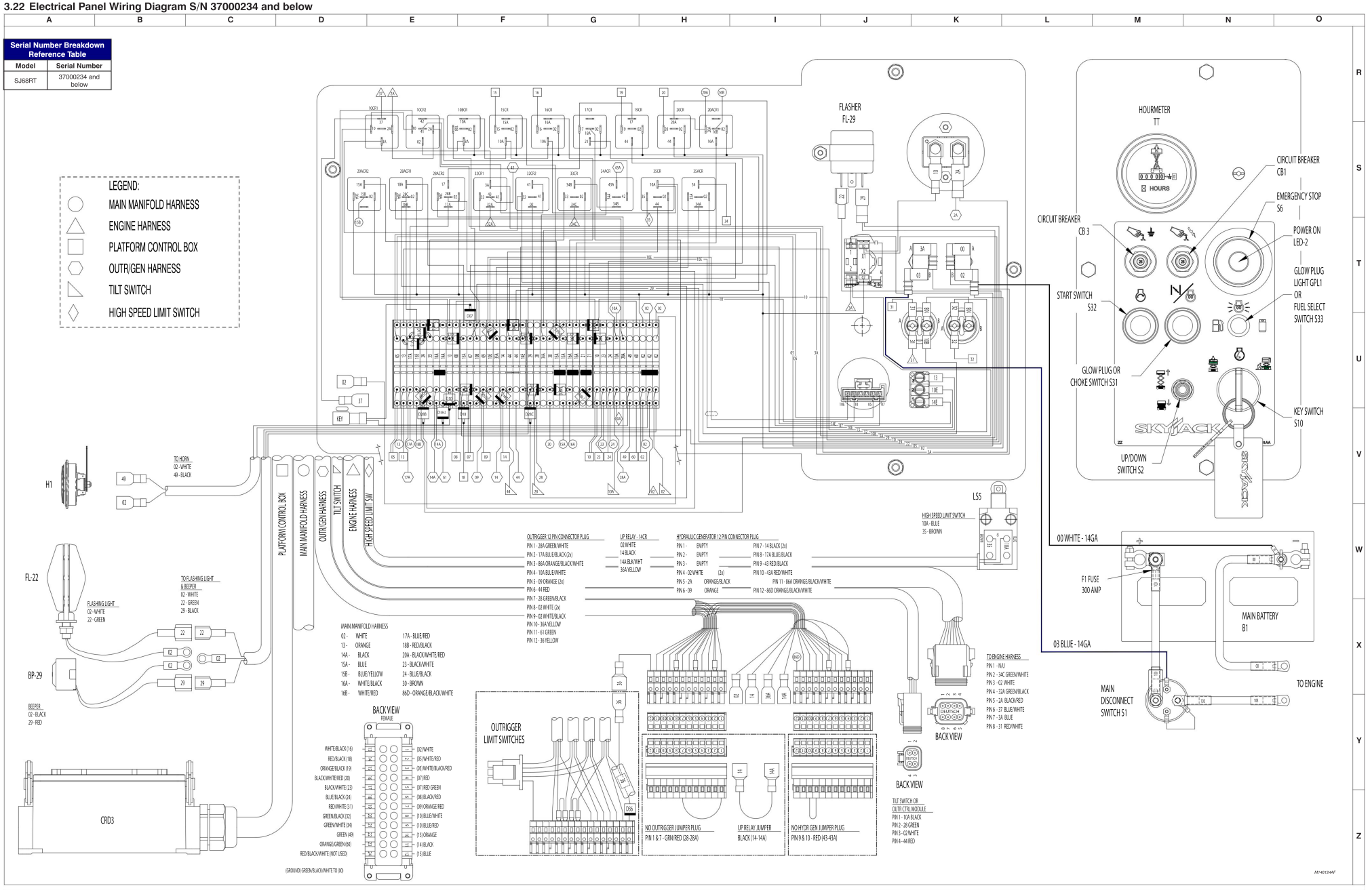

3.23 Electrical Panel Diagram with Positive Air Shut Off Option S/N 37000235 and above

Serial Number Breakdown Reference Table	
Model	Serial Number
SJ68RT	37000235 and above

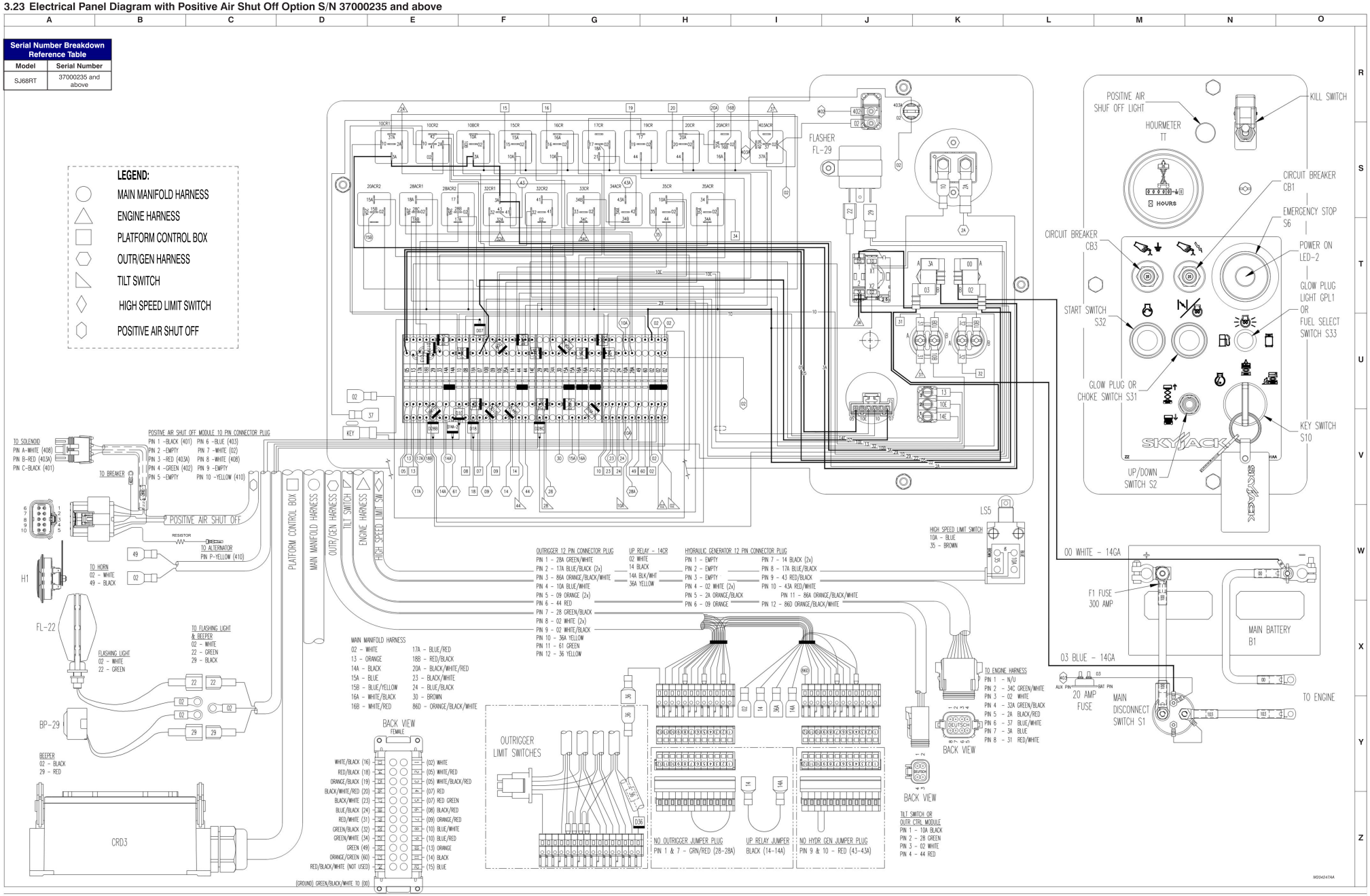

3.24 Electrical Panel Diagram with Positive Air Shut Off Option S/N 37000234 and below

Serial Number Breakdown Reference Table	
Model	Serial Number
SJ68RT	37000234 and below

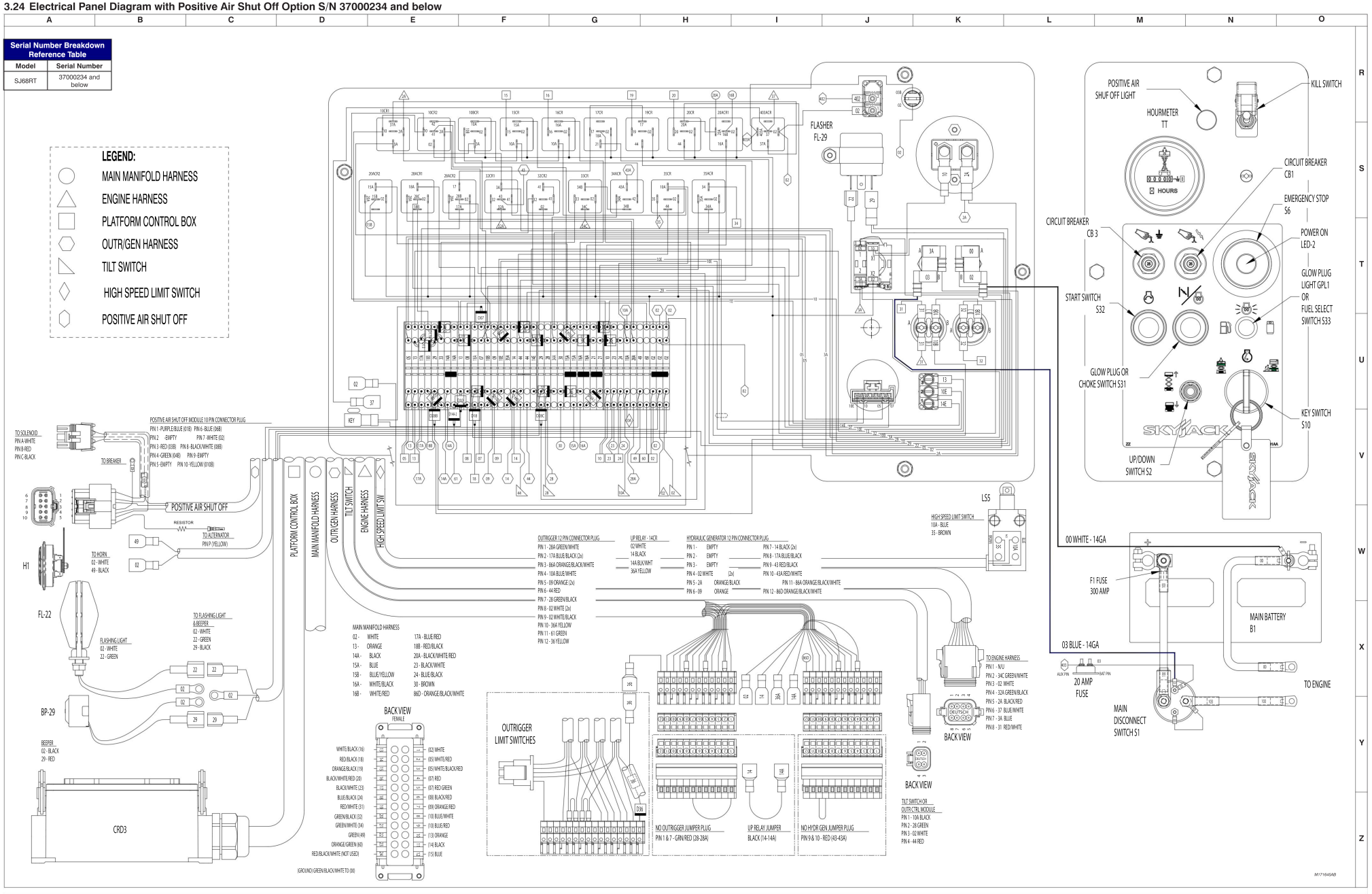

3.25 Positive Air Shut Off Harness Wiring Diagram – Diesel Engine

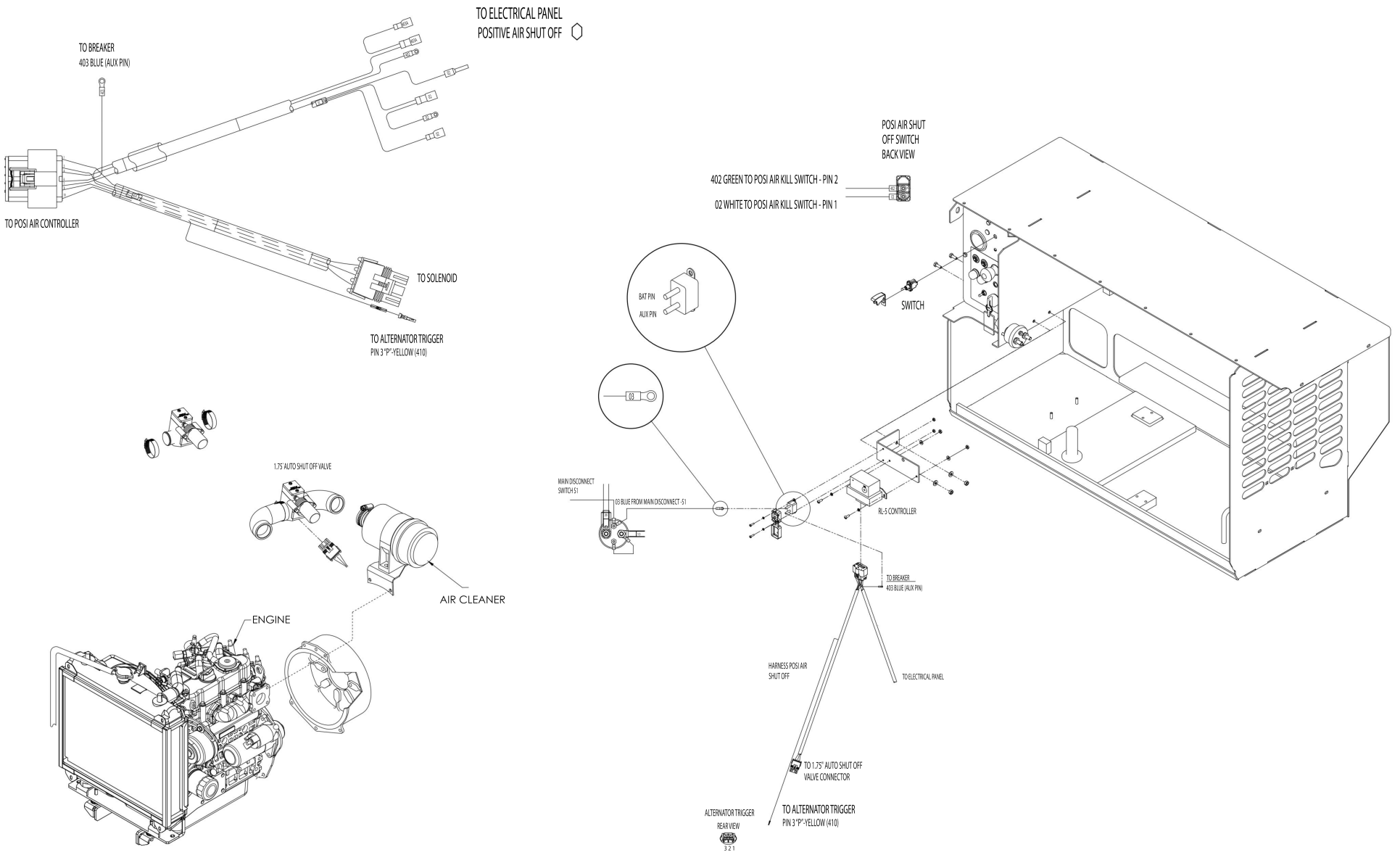

3.26 Electrical Schematic (No Option with Kubota Dual Fuel Engine) S/N 37009565 and above

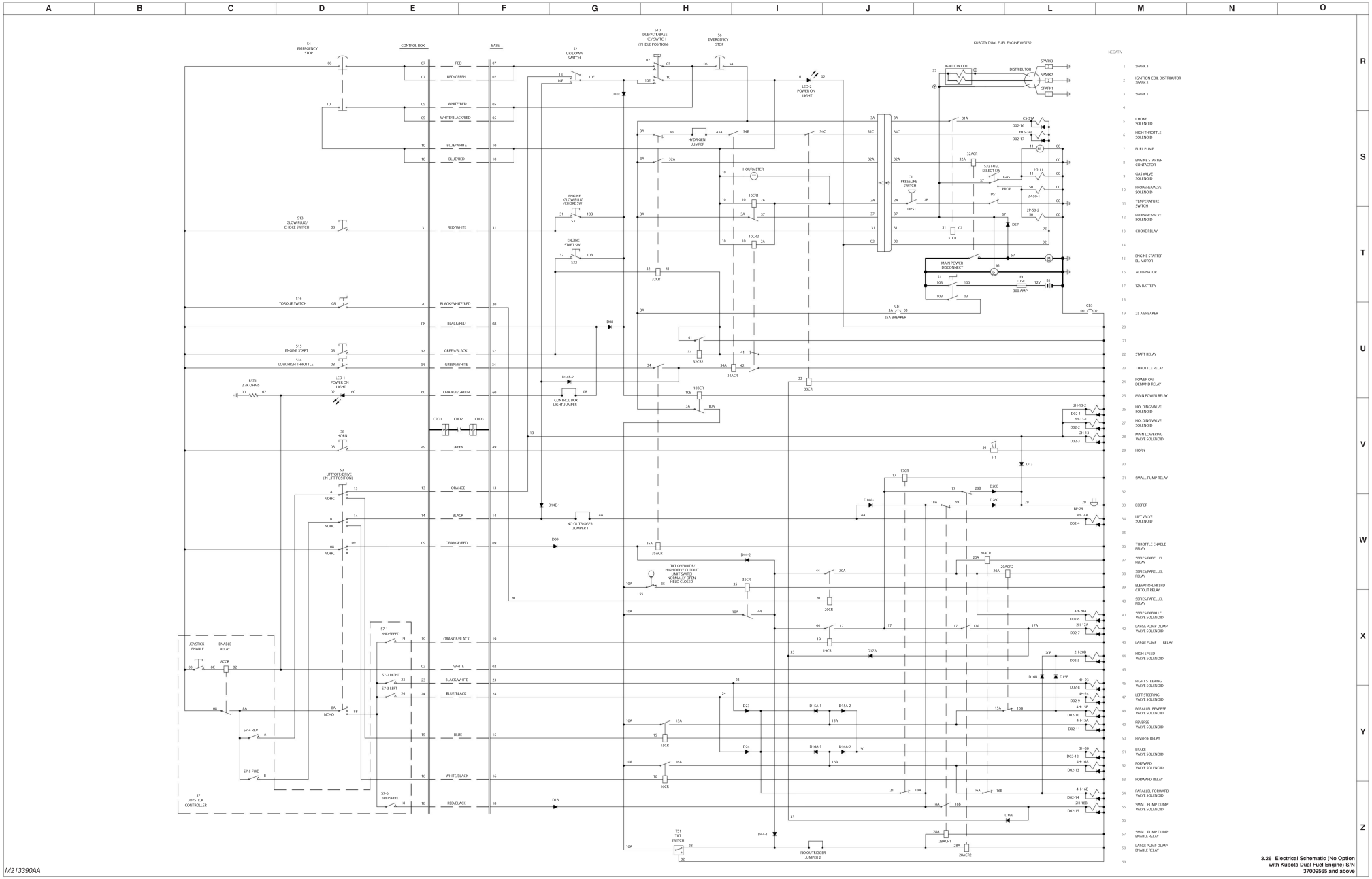

3.27 Electrical Schematic (No Option with Kubota Dual Fuel Engine) S/N 37000235 to 37009564

Serial Number Breakdown Reference Table	
Model	**Serial Number**
SJ68RT	37000235 to 37009564

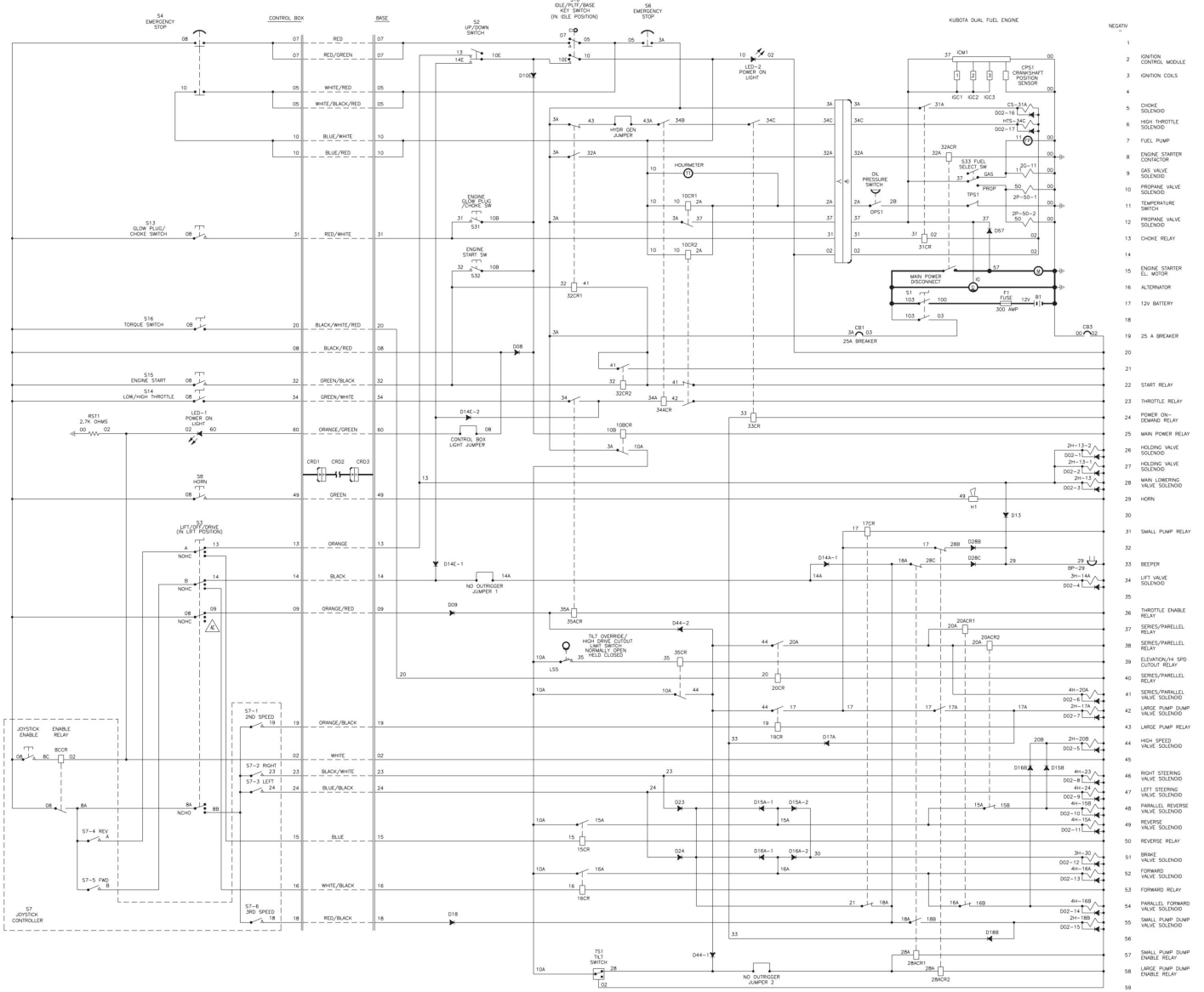

3.28 Electrical Schematic (No Option with Kubota Dual Fuel Engine) S/N 37000234 and below

Serial Number Breakdown Reference Table	
Model	**Serial Number**
SJ68RT	37000234 and below

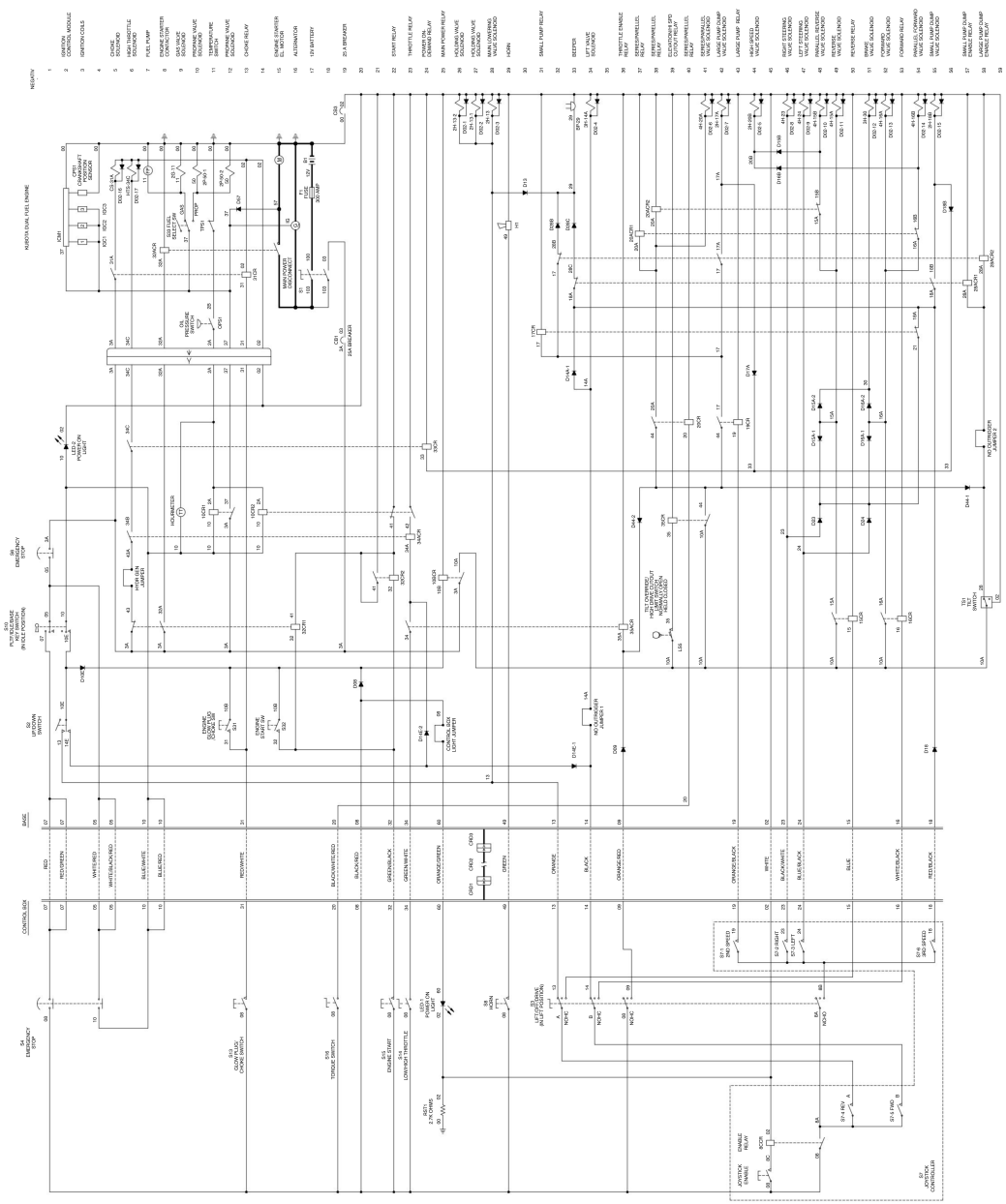

3.29 Electrical Schematic (All Option with Kubota Dual Fuel Engine) S/N 37009565 and above

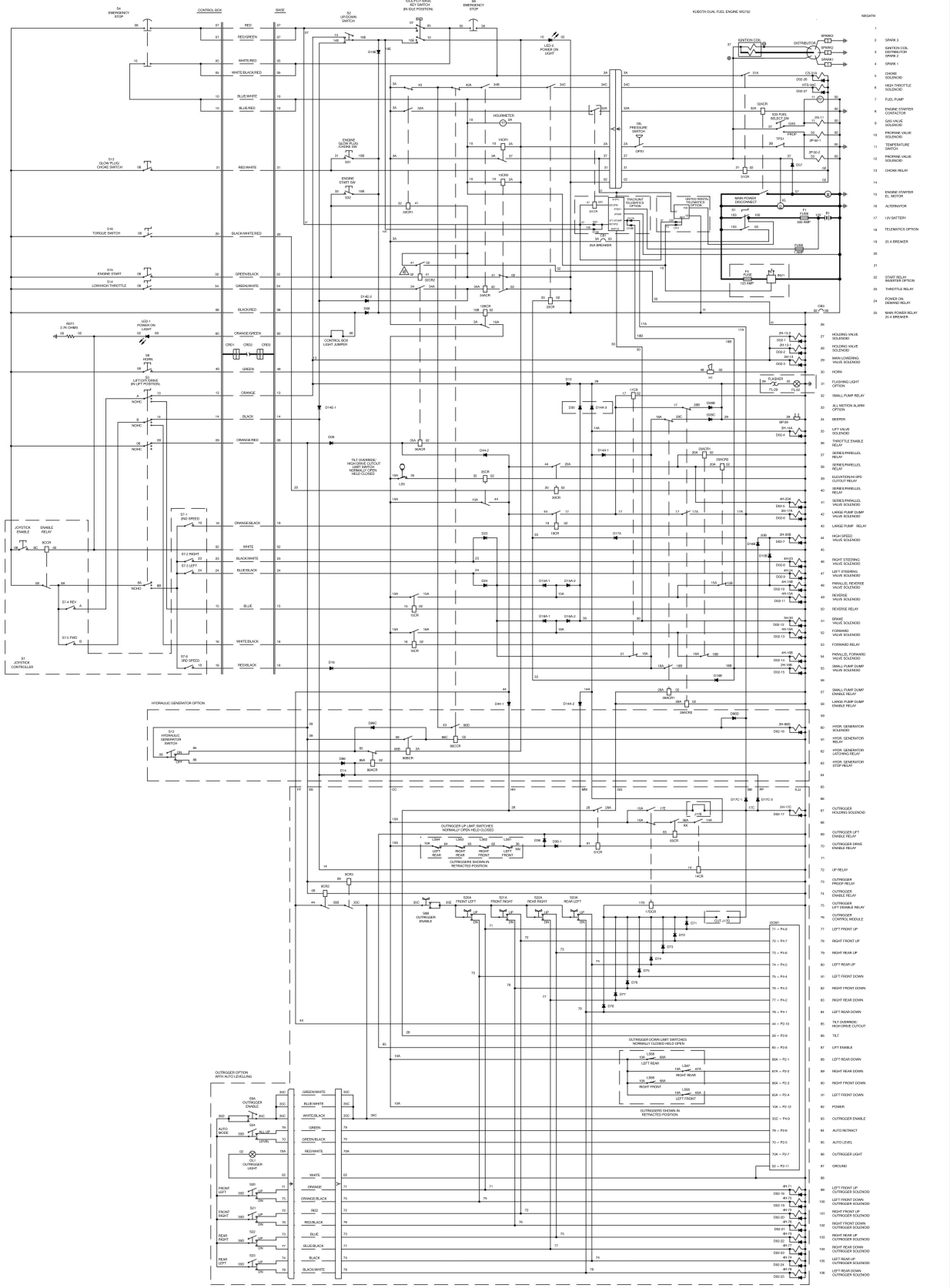

3.30 Electrical Schematic (All Option with Kubota Dual Fuel Engine) S/N 37000235 to 37009564

Serial Number Breakdown Reference Table	
Model	Serial Number
SJ68RT	37000235 to 37009564

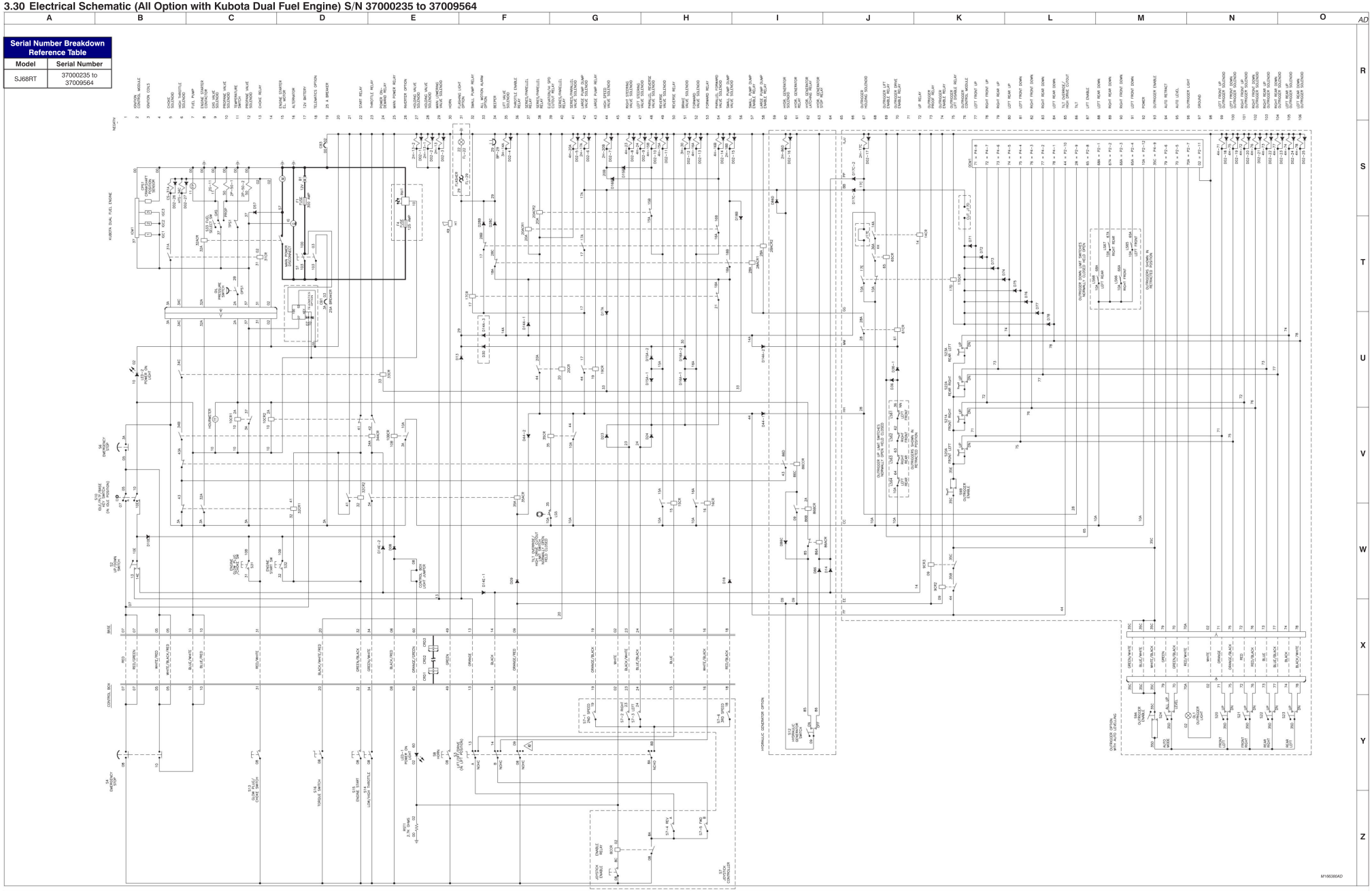

3.31 Electrical Schematic (All Option with Kubota Dual Fuel Engine) S/N 37000234 and below

Serial Number Breakdown Reference Table	
Model	Serial Number
SJ6826RT	37000234 and below

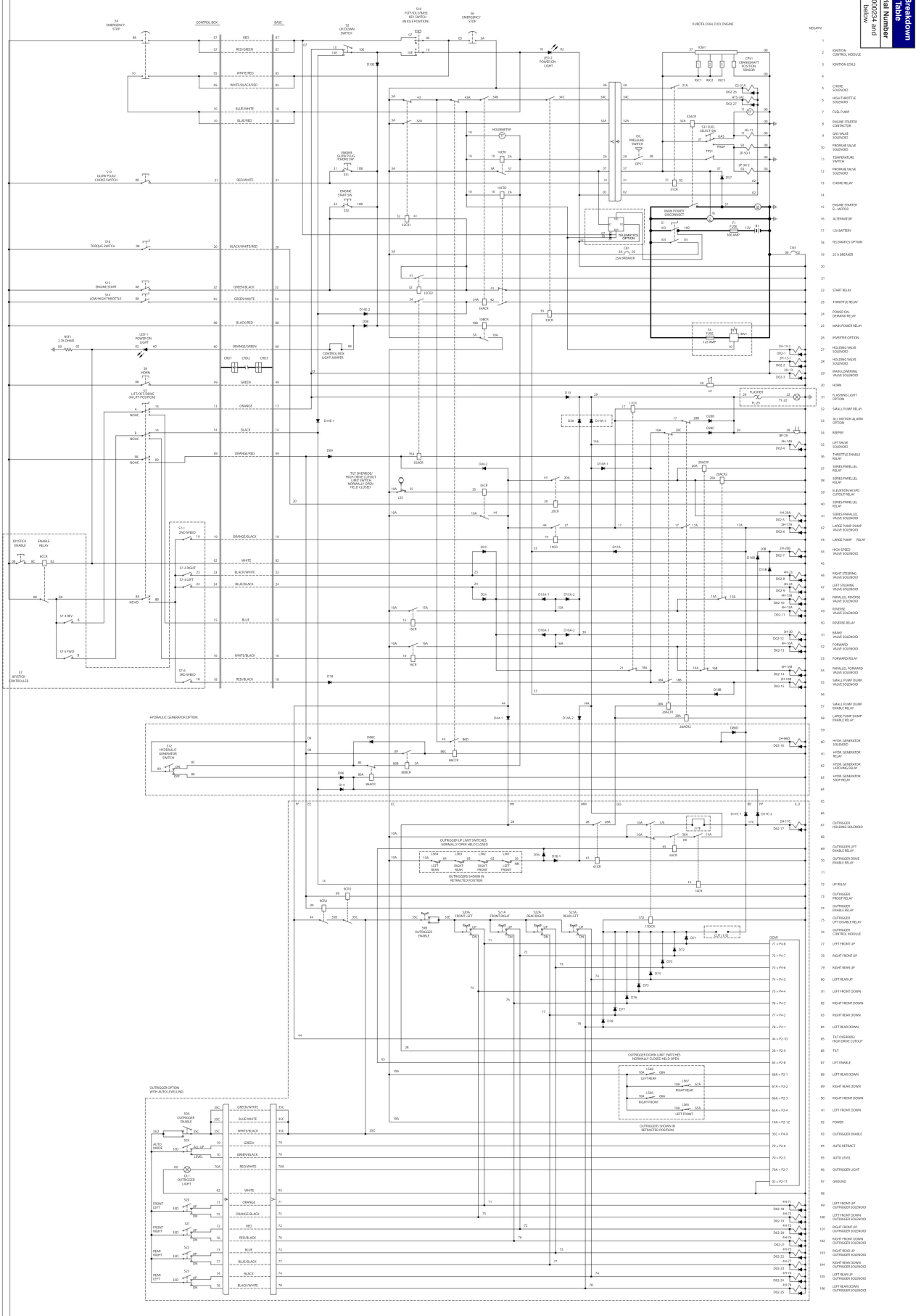
KUBOTA DUAL FUEL ENGINE
CONTROL BOX
BASE
HYDRAULIC GENERATOR OPTION
OUTRIGGER OPTION (WITH AUTO LEVELING)
OUTRIGGER UP LIMIT SWITCHES NORMALLY OPEN HELD CLOSED
OUTRIGGERS SHOWN IN RETRACTED POSITION
OUTRIGGER DOWN LIMIT SWITCHES NORMALLY CLOSED HELD OPEN
OUTRIGGERS SHOWN IN RETRACTED POSITION
TILT OVERRIDE/ HIGH DRIVE CUTOUT LIMIT SWITCH NORMALLY OPEN HELD CLOSED
JOYSTICK ENABLE
ENABLE RELAY
JOYSTICK CONTROLLER
S7-1 2ND SPEED
S7-2 RIGHT
S7-3 LEFT
S7-4 REV
S7-5 FWD
S7-6 3RD SPEED
S4 EMERGENCY STOP
S10 TILT/TILT ENABLE KEY SWITCH (IN OLD POSITION)
S6 EMERGENCY STOP
S2 UP/DOWN SWITCH
S11 GLOW PLUG/ CHOKE SWITCH
S16 TORQUE SWITCH
S13 ENGINE START
S14 LOW/HIGH THROTTLE
S8 HORN
S3 LIFT/SOFT DRIVE (IN LIFT POSITION)
S12 HYDRAULIC GENERATOR SWITCH
S56 OUTRIGGER ENABLE
S24 AUTO LEVEL
S20 FRONT LEFT
S21 FRONT RIGHT
S22 REAR RIGHT
S23 REAR LEFT
S50 OUTRIGGER ENABLE
DL1 OUTRIGGER LIGHT
ECM1
ECM2
ICM1
EFCI CRANKSHAFT POSITION SENSOR
CS-32A
HTS-32C
32ACR
33 FUEL SELECT SW
OIL PRESSURE SWITCH
OPS1
TPS1
31CR
MAIN POWER DISCONNECT
TELEMATICS OPTION
25A BREAKER
CB1
F1 FUSE 30 AMP
F2 FUSE 125 AMP
BATT
HOURMETER
ENGINE GLOW PLUG /CHOKE SW
ENGINE START SW
32CR1
32CR2
34ACR
108CR
10A
CONTROL BOX LIGHT JUMPER
LED-1 POWER ON LIGHT
RST1 2.7K OHMS
CR01 CR02 CR03
FLASHER
FL1,22
FL 29
13CR
17CR
16A
20C
D180
D180C
20ACR1
20ACR2
20A
33ACR
33A
33CR
D33A
D33B
D33C
D33D
D33E
D33F
D33G
D33H
D33I
D33J
D33K
D33L
D33M
D33N
D33O
D33P
D33Q
D33R
D33S
D33T
D33U
D33V
D33W
D33X
D33Y
D33Z
D34A
D34B
D34C
D34D
D34E
D34F
D34G
D34H
D34I
D34J
D34K
D34L
D34M
D34N
D34O
D34P
D34Q
D34R
D34S
D34T
D34U
D34V
D34W
D34X
D34Y
D34Z
D35A
D35B
D35C
D35D
D35E
D35F
D35G
D35H
D35I
D35J
D35K
D35L
D35M
D35N
D35O
D35P
D35Q
D35R
D35S
D35T
D35U
D35V
D35W
D35X
D35Y
D35Z

3.32 Electrical Schematic (All Option with Kubota Diesel Engine) S/N 37000235 and above

Serial Number Breakdown Reference Table	
Model	**Serial Number**
SJ68RT	37000235 and above

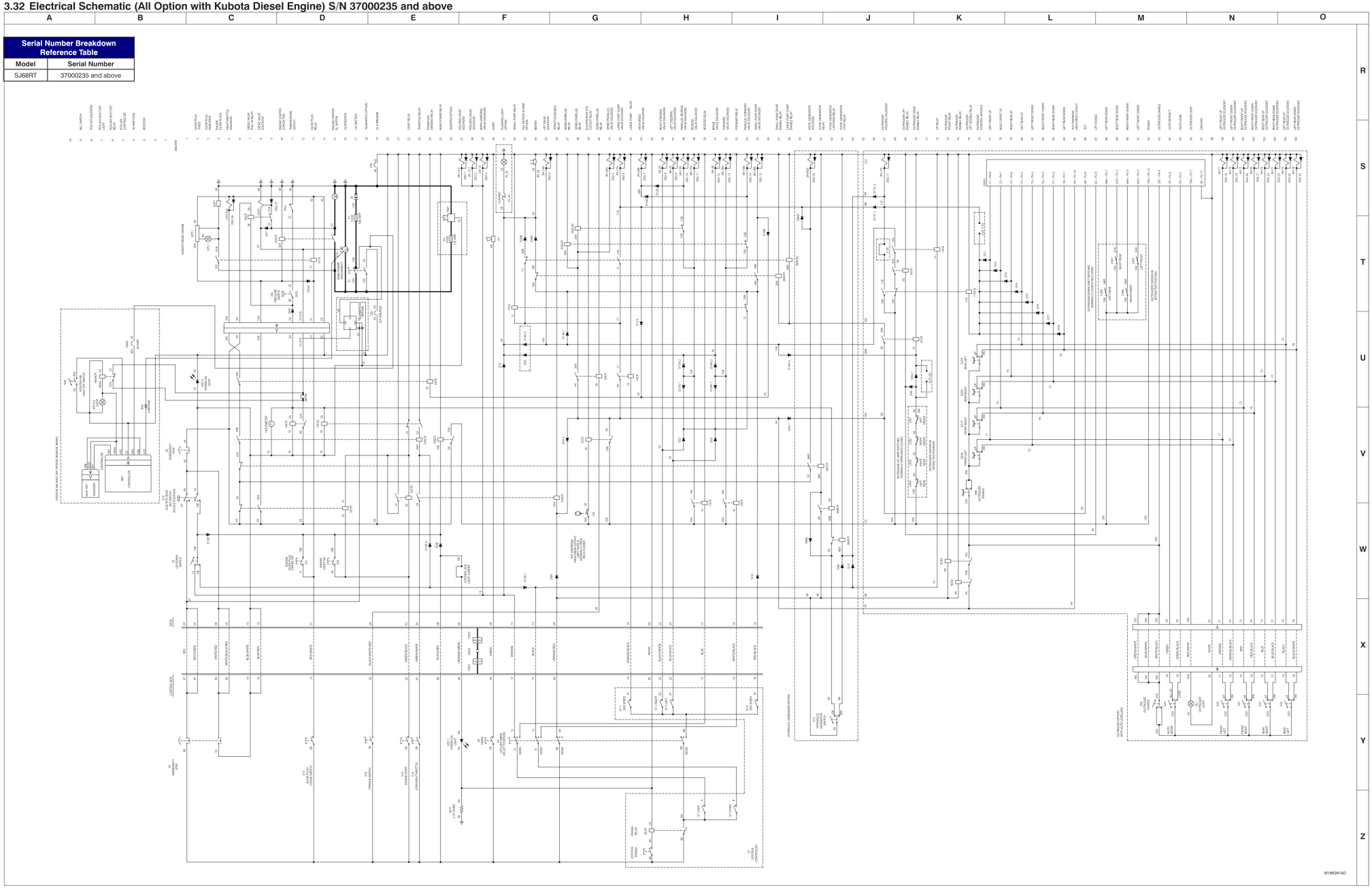

3.33 Electrical Schematic (All Option with Kubota Diesel Engine) S/N 37000234 and below

Serial Number Breakdown Reference Table	
Model	Serial Number
S-8832RT	37000234 and below

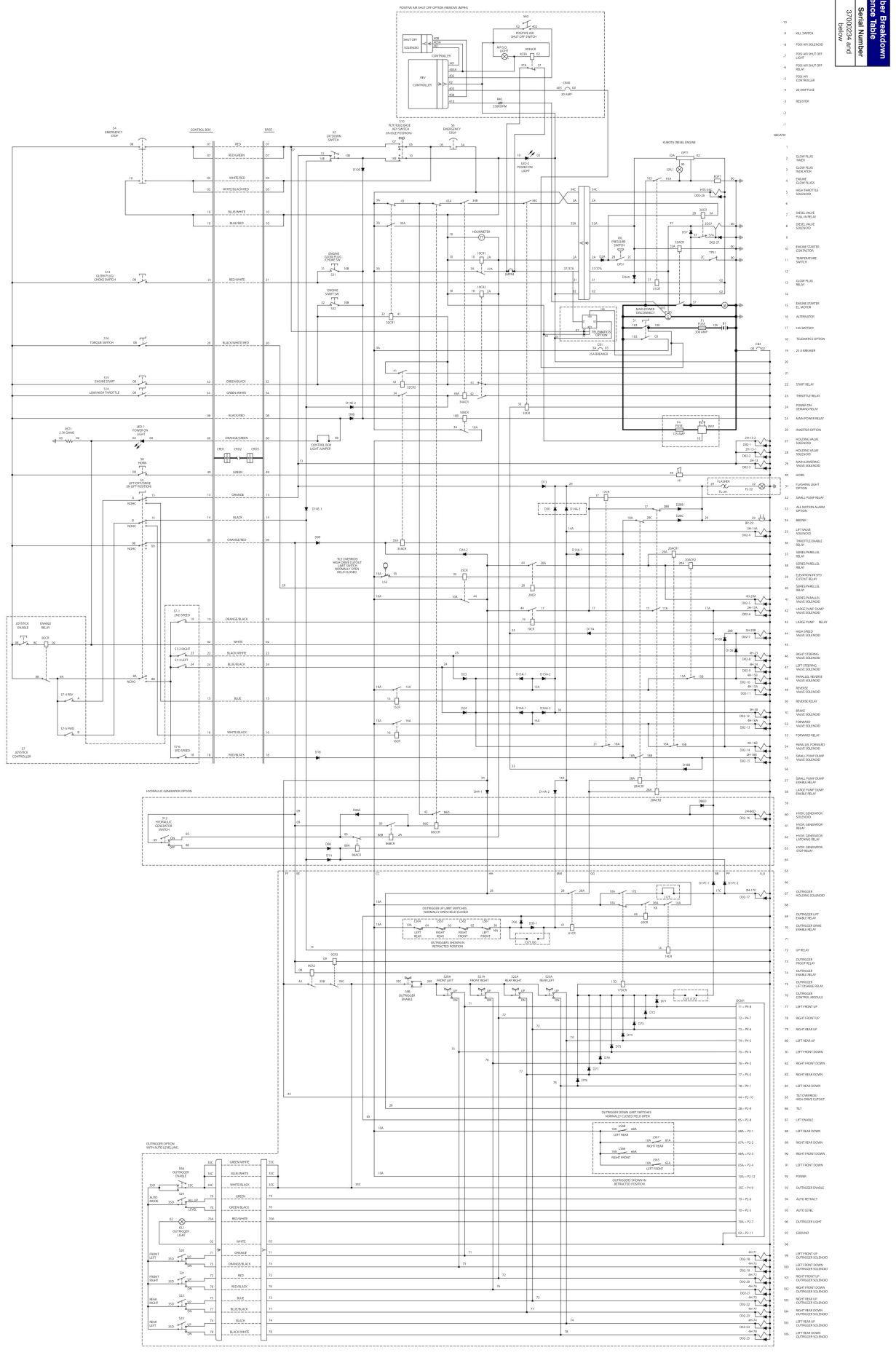

Section 4 – Troubleshooting Guide

4.1 Introduction

The following pages contain Troubleshooting Information for locating and correcting most service problems that can develop.

Careful and accurate analysis of the systems listed can localize the trouble more quickly than any other method.

This manual cannot cover all possible problems that may occur. If a problem occurs that is not listed, isolate the component and determine whether the problem is electrical or hydraulic. Have the problem corrected before operating the machine.

4.2 Electrical System

4.2-1 All Controls Inoperative

1. Battery disconnected or discharged.	**Reconnect battery. Recharge if discharged.**
2. Loose or dirty battery cables.	**Clean and tighten battery cables.**
3. Defective main fuse F1 (300 amp).	**Check fuse. Replace if defective.**
4. Open or defective main power disconnect switch S1.	**Close switch. Replace if defective.**
5. Loose or broken wire #03 from main power disconnect switch S1 to circuit breaker CB1.	**Check continuity. Replace if defective.**
6. Tripped or defective circuit breaker CB1.	**Reset breaker. Check for defective wiring. Replace breaker if defective.**
7. Loose or broken wire #3A from breaker CB1 to base terminal block TB-1.	**Check continuity. Replace if defective.**
8. Loose or broken wire #3A from base terminal block TB-1 to base emergency stop switch S6.	**Check continuity. Replace if defective.**
9. Defective base emergency stop switch S6.	**Check switch. Replace if defective.**
10. Loose or broken wire #5 from base emergency stop switch S6 to base terminal block TB-1.	**Check continuity. Replace if defective.**
11. Loose or broken wire #5 from base terminal block TB-1 to key switch S10.	**Check continuity. Replace if defective.**
12. Defective key switch S10.	**Check switch. Replace if defective.**
13. Loose or broken wire #7 from key switch S10 to base terminal block TB-1.	**Check continuity. Replace if defective.**
14. Loose or broken wire #7 from base terminal block TB-1 to platform emergency stop switch S4.	**Check continuity. Replace if defective.**
15. Defective platform emergency stop switch S4.	**Check switch. Replace if defective.**
16. Loose or broken wire #10 from platform emergency stop switch S4 to base terminal block TB-1.	**Check continuity. Replace if defective.**
17. Loose or broken wire #10 from base terminal block TB-1 to key switch S10.	**Check continuity. Replace if defective.**
18. Defective key switch S10.	**Check switch. Replace if defective.**

4.2-2 No Power To Platform

1. Open or defective key switch S10.	**Check switch. Replace if defective.**
2. Loose or broken wire #07 from key switch S10 to base terminal block TB-1.	**Check continuity. Replace if defective.**
3. Loose or broken wire #07 from base terminal block TB-1 to platform emergency stop switch S4.	**Check continuity. Replace if defective.**
4. Open or defective platform emergency stop switch S4.	**Check switch. Replace if defective.**

4.2-3 All Functions Inoperative from The Platform

1. Open or defective emergency stop switch S4.	**Check switch. Replace if defective.**
2. Loose or broken wire #08 from platform emergency stop switch S4 to base terminal block TB-1.	**Check continuity. Replace if defective.**
3. Open diode D08 at base terminal block TB-1.	**Check diode. Replace if defective.**

4.2-4 Engine Will Not Crank from Platform or Base Control Console

1. Loose or broken wire #8 from horn switch S8 to start switch S15 (Platform only).	**Check continuity. Replace if defective.**
2. Defective start switch S15 (Platform only).	**Check switch. Replace if defective.**
3. Loose or broken wire #32 from start switch S15 to base start switch S32 (Platform only).	**Check continuity. Replace if defective.**
4. Loose or broken wire #10E from key switch S10 to base terminal block TB-1 (Base only).	**Check continuity. Replace if defective.**
5. Defective key switch S10 (Base only).	**Check switch. Replace if defective.**
6. Open or defective diode D10E (Base only).	**Check diode. Replace if defective.**
7. Loose or broken wire #10B from base terminal block TB-1 to base choke / glow plug switch S31(Base only).	**Check continuity. Replace if defective.**
8. Loose or broken wire #10B from base choke / glow plug switch S31 to base start switch S32 (Base only).	**Check continuity. Replace if defective.**
9. Defective base start switch S32 (Base only).	**Check switch. Replace if defective.**
10. Loose or broken wire #32 from base start switch S32 to relay 32CR2.	**Check continuity. Replace if defective.**
11. Defective relay 32CR2.	**Check relay. Replace if defective.**
12. Loose or broken jumper wire #41 on relay 32CR2.	**Check continuity. Replace if defective.**
13. Loose or broken wire #02 from relay 32CR2 to base terminal block TB-1.	**Check continuity. Replace if defective.**
14. Ground not getting through N/C set of contacts on relay 10CR2 to relay 32CR2.	**Check continuity through contacts. Replace if defective.**
15. Loose or broken wire #3A from relay 10BC2 to relay 32CR1.	**Check continuity. Replace if defective.**
16. Loose or broken wire #32A from relay 32CR1 to engine harness.	**Check continuity. Replace if defective.**
17. Loose or broken wire #32 from relay 32CR2 to relay 32CR1.	**Check continuity. Replace if defective.**
18. Loose or broken wire #41 from relay 32CR2 to relay 32CR1.	**Check continuity. Replace if defective.**
19. Defective relay 32CR1.	**Check relay. Replace if defective.**

20. Loose or broken wire #32A from engine harness to starter contactor 32ACR.	**Check continuity. Replace if defective.**
21. Defective starter contactor 32ACR.	**Check contactor. Replace if defective.**
22. Loose or broken wire #00 from starter contactor 32ACR to base terminal block TB-1.	**Check continuity. Replace if defective.**
23. Loose or broken wire #103 from main power disconnect S1 to starter contactor 32ACR.	**Check continuity. Replace if defective.**
24. Loose or broken wire #57 from starter contactor 32ACR to starter motor.	**Check continuity. Replace if defective.**
25. Defective starter motor.	**Check motor. Repair or replace if defective.**

4.2-5 Engine Cranks But Does not Start – Kubota Diesel

1. Open diode D32A from engine start switch S32 to glow plug switch S31. (Diode located in Engine harness. Refer to Engine wiring diagram- Diesel Fuel System)	**Check diode. Replace if defective.**
2. Loose or broken wire #37 from engine harness to diesel valve solenoid 2D37.	**Check continuity. Replace if defective.**
3. Loose or broken wire #57 from starter contactor 32ACR to diesel valve solenoid 2D37.	**Check continuity. Replace if defective.**
4. Defective fuel valve solenoid 2D37.	**Check solenoid. Replace if defective.**
5. Defective glow plugs.	**Check glow plugs. Repair if necessary.**
6. Defective glow plug timer GPT1.	**Check timer. Replace if defective.**
7. Defective glow plug relay 31CR.	Check relay. Replace if defective.

4.2-6 Engine Cranks But Does not Start – Kubota Dual Fuel

1. Open or defective diode D57. (Diode located in Engine harness. Refer to Engine wiring diagram- Dual Fuel System)	**Check diode. Replace if defective.**
2. Loose or broken wire #37 from engine harness plug to coil pack 2 wire connector.	**Check continuity. Replace if defective.**
3. Loose or broken wire #00 from coil pack 2 wire connector to engine ground.	**Check continuity. Replace if defective.**
4. Loose or broken wire #00 from engine ground to crank position sensor.	**Check continuity. Replace if defective.**

1. Loose or broken wire #37 from ignition control module ICM1 to crank position sensor CPS1.	**Check continuity. Replace if defective.**
2. Defective ignition control module ICM1.	**Refer to section 5 of this manual for Ohm specifications. Replace if defective.**
3. Defective crank position sensor CPS1.	Refer to section 5 of this manual for Ohm specifications. Replace if defective.
4. Loose or broken wire #37 from engine harness plug to fuel select switch S33.	Check continuity. Replace if defective.
5. Defective fuel switch S33.	**Check switch. Replace if defective.**
6. While in gasoline, loose or broken wire #11 from fuel select switch S33 to fuel pump FP11 or gas valve 2G-11.	**Check continuity. Replace if defective.**
7. While in propane, loose or broken wire #50 from fuel select switch S33 to fuel lockoff 2P-50-1 or propane lockoff 2P-50-2.	**Check continuity. Replace if defective.**
8. Loose or broken wire #00 from engine ground to propane lockoff 2P-50-1 or 2P-50-2 (propane) or to gasoline 2G-11 or fuel pump FP11 (gasoline).	**Check continuity. Replace if defective.**
9. Defective propane lockoff 2P-50-1 or 2P-50-2 (propane) or gas valve 2G-11 or fuel pump FP11 (gasoline).	**Check lockoffs, valve or pump. Replace if defective.**

4.2-7 Glow Plugs Inoperative from Engine Controls or Platform (Diesel Models)

1. Loose or broken wire #8 from start switch S15 to glow plug switch S13 (Platform only).	**Check continuity. Replace if defective.**
2. Defective glow plug switch S13 (Platform only).	**Check switch. Replace if defective.**
3. Loose or broken wire #31 from glow plug switch S13 to base glow plug switch S31 (Platform only).	**Check continuity. Replace if defective.**
4. Loose or broken wire #10B from base terminal block TB-1 to base glow plug switch S31 (Base only).	**Check continuity. Replace if defective.**
5. Defective base glow plug switch S31 (Base only).	**Check switch. Replace if defective.**
6. Loose or broken wire #31 from glow plug switch S31 to glow plug relay 31CR.	**Check continuity. Replace if defective.**
7. Loose or broken wire #02 from glow plug relay 31CR to base terminal block TB1.	**Check continuity. Replace if defective.**
8. Loose or broken wire #103 from engine starter to relay 31CR.	**Check continuity. Replace if defective.**

9. Loose or broken wire #91A from relay 31CR to engine glow plugs EGP1.	**Check continuity. Replace if defective.**
10. Defective glow plug relay 31CR.	**Check relay. Replace if defective.**
11. Defective glow plugs.	**Check glow plugs. Replace if defective.**

4.2-8 Choke Inoperative from Engine Controls or Platform (Kubota Dual Fuel)

1. Loose or broken wire #8 from start switch S15 to choke switch S13 (Platform only).	**Check continuity. Replace if defective.**
2. Defective choke switch S13 (Platform only).	**Check switch. Replace if defective.**
3. Loose or broken wire #31 from choke switch S13 to base choke switch S31 (Platform only).	**Check continuity. Replace if defective.**
4. Loose or broken wire #10B from base terminal block TB-1 to base choke switch S31 (Base only).	**Check continuity. Replace if defective.**
5. Defective base choke switch S31 (Base only).	**Check switch. Replace if defective.**
6. Loose or broken wire #31 from base choke switch S31 to engine harness.	**Check continuity. Replace if defective.**
7. Loose or broken wire #31 from engine harness to relay 31CR.	**Check continuity. Replace if defective.**
8. Loose or broken wire #02 from engine harness to relay 31CR.	**Check continuity. Replace if defective.**
9. Loose or broken wire #3A from engine harness to relay 31CR.	**Check continuity. Replace if defective.**
10. Defective relay 31CR.	**Check relay. Replace if defective.**
11. Loose or broken wire #31A from relay 31CR to choke solenoid CS-31A.	**Check continuity. Replace if defective.**
12. Loose or broken wire #02 from engine harness to choke solenoid CS-31A.	**Check continuity. Replace if defective.**
13. Defective choke solenoid CS-31A.	**Check solenoid. Replace if defective.**

4.2-9 High Throttle Inoperative

NOTE

If machine is in drive mode and is elevated above high speed limit switch, high throttle is inoperative.

1. Loose or broken wire #08 from lift / drive select switch S3 to low/high throttle switch S14.	**Check continuity. Replace if defective.**

2. Defective low/high throttle switch S14.	**Check switch. Replace if defective.**
3. Loose or broken wire #34 from low/high throttle switch S14 to relay 35ACR.	**Check continuity. Replace if defective.**
4. Open diode D09 (when in lift only).	**Check diode. Replace if defective.**
5. Open diode D44-2 (when in drive only).	**Check diode. Replace if defective.**
6. Loose or broken wire #35A from base terminal block TB-1 to relay 35ACR.	**Check continuity. Replace if defective.**
7. Defective relay 35ACR.	**Check relay. Replace if defective.**
8. Loose or broken wire #02 from relay 35ACR to terminal block TB1.	**Check continuity. Replace if defective.**
9. Loose or broken wire #34A from relay 35ACR to relay 34ACR.	**Check continuity. Replace if defective.**
10. Defective relay 34ACR.	**Check relay. Replace if defective.**
11. Loose or broken wire #42 from relay 34ACR to relay 10CR2.	**Check continuity. Replace if defective.**
12. Defective relay 10CR2.	**Check relay. Replace if defective.**
13. Loose or broken wire #2A from relay 10CR2 to relay 10CR1.	**Check continuity. Replace if defective.**
14. Loose or broken wire #3A from base terminal block TB1 to relay 32CR1.	**Check continuity. Replace if defective.**
15. Defective relay 32CR1.	**Check relay. Replace if defective.**
16. Loose or broken wire #43 from relay 32CR1 to relay 34ACR.	**Check continuity. Replace if defective.**
17. Loose or broken wire #34B from relay 34ACR to relay 33CR.	**Check continuity. Replace if defective.**

4.2-10 High Throttle On Demand Inoperative (Kubota Dual Fuel)

NOTE

If machine is in drive mode and is elevated above high speed limit switch, high throttle is inoperative.

1. Throttle switch S14 in low throttle position.	**Select high throttle position on switch.**
2. Open or defective diode D17A or D18B.	**Check diodes. Replace if defective.**
3. Loose or broken wire #33 from terminal block TB1 to power on demand relay 33CR.	**Check continuity. Replace if defective.**

4. Loose or broken wire #02 from terminal block TB1 to power on demand relay 33CR.	**Check continuity. Replace if defective.**
5. Defective power on demand relay 33CR.	**Check relay. Replace if defective.**
6. Loose or broken wire #34C from power on demand relay 33CR to high throttle solenoid HTS-34C.	**Check continuity. Replace if defective.**
7. Defective high throttle solenoid HTS-34C.	**Check solenoid. Replace if defective.**

NOTE

If the above does not repair the high throttle on demand, refer to high throttle inoperative in this section.

4.2-11 Drive and Steer Inoperative (Machines without outriggers option)

1. Lift/Drive select switch S3 in lift position.	**Turn switch to Drive position.**
2. Defective contacts on lift/drive select switch between wire #8A and wire #8B.	**Check continuity through contact. Replace if defective.**
3. Loose or broken wire #08 from Lift/Drive select switch S3 to controller enable switch S7-7.	**Check continuity. Replace if defective.**
4. Defective controller enable switch S7-7.	**Check switch. Replace if defective.**
5. Loose or broken wire #8A from controller enable relay 8CCR to speed, steer and direction switches S7-1 to S7-6.	**Check continuity. Replace if defective.**
6. Loose or broken wire #8C from controller enable switch S7-7 to controller enable relay 8CCR.	**Check continuity. Replace if defective.**
7. Defective controller enable relay 8CCR.	**Check continuity. Replace if defective.**
8. Loose or broken wire #02 from controller enable relay 8CCR to controller harness.	**Check continuity. Replace if defective.**
9. Loose or broken wire #10A from base terminal block to tilt switch TS1.	**Check continuity. Replace if defective.**
10. Defective tilt switch TS1.	**Check tilt switch. Replace if defective.**
11. Loose or broken wire #28 from tilt switch TS1 to terminal block TB1.	**Check continuity. Replace if defective.**
12. Loose or broken wire #28 from base terminal TB1 to outrigger connector CN14 at pin #7.	**Check continuity. Replace if defective.**
13. Loose or broken jumper wire from #28 to # 28A on outrigger connector CN14 between pin #1 and pin #7.	**Check continuity. Replace if defective.**
14. Loose or broken wire #28A from outrigger connector CN14 at pin #1 to base terminal block TB1.	**Check continuity. Replace if defective.**

4.2-12 Drive and Steer Inoperative (Machines with outriggers option)

1. Outriggers not fully retracted	**Fully retract outrigger cylinders**
2. Lift/Drive select switch S3 in lift position.	**Turn switch to Drive position.**
3. Defective contacts on lift/drive select switch between wire #8A and wire #8B.	**Check continuity through contact. Replace if defective.**
4. Loose or broken wire #08 from lift/drive select switch S3 to controller enable switch S7-7.	**Check continuity. Replace if defective.**
5. Defective controller enable switch S7-7.	**Check switch. Replace if defective.**
6. Loose or broken wire #8A from controller enable relay 8CCR to speed, steer and direction switches S7-1 to S7-6.	**Check continuity. Replace if defective.**
7. Loose or broken wire #8C from controller enable switch S7-7 to controller enable relay 8CCR.	**Check continuity. Replace if defective.**
8. Defective controller enable relay 8CCR.	**Check continuity. Replace if defective.**
9. Loose or broken wire #02 from controller enable relay 8CCR to controller harness.	**Check continuity. Replace if defective.**
10. Loose or broken wire #10A from base terminal block TB1 to outrigger control module OCM1 at pin #p2-12.	**Check continuity. Replace if defective.**
11. Loose or broken wire #28 from outrigger control module OCM1 at pin #P2-9 to outrigger connector CN14 at pin #7.	**Check continuity. Replace if defective.**
12. Left rear outrigger limit switch LS64 is out of adjustment or defective.	**Check continuity through switch. Adjust switch if out of adjustment. Replace if defective.**
13. Right rear outrigger limit switch LS63 is out of adjustment or defective.	**Check continuity through switch. Adjust switch if out of adjustment. Replace if defective.**
14. Right front outrigger limit switch LS62 is out of adjustment or defective.	**Check continuity through switch. Adjust switch if out of adjustment. Replace if defective.**
15. Left front outrigger limit switch LS61 is out of adjustment or defective.	**Check continuity through switch. Adjust switch if out of adjustment. Replace if defective.**
16. Defective drive enable relay 61CR.	**Check relay. Replace if defective.**
17. Loose or broken wire #28A from pin #1 on connector CN14 at the outrigger board to terminal block TB1.	**Check continuity. Replace if defective.**

4.2-13 Brakes Does not Release

1. Loose or broken wire #30 from base terminal block TB1 to brake valve coil 3H-30.	**Check continuity. Replace if defective.**
2. Defective brake valve coil 3H-30.	**Check continuity through coil. Replace if defective.**
3. Loose or broken wire #02 from brake valve 3H-30 to base terminal block TB1.	**Check continuity. Replace if defective.**

4.2-14 Steer Right Inoperative

1. Defective steer right switch S7-2 in controller S7.	**Check switch. Replace if defective.**
2. Loose or broken wire #23 from steer right switch S7-2 to base terminal block TB1.	**Check continuity. Replace if defective.**
3. Loose or broken wire #23 from base terminal block TB1 to steer right valve coil 4H-23.	**Check continuity. Replace if defective.**
4. Defective steer right valve coil 4H-23.	**Check coil. Replace if defective.**
5. Loose or broken wire #02 from steer right valve coil 4H-23 to base terminal block TB1.	**Check continuity. Replace if defective.**
6. Open diode D23.	**Check diode. Replace if defective.**

4.2-15 Steer Left Inoperative

1. Defective steer left switch S7-3 in controller S7.	**Check switch. Replace if defective.**
2. Loose or broken wire #24 from steer left switch S7-3 to base terminal block TB1.	**Check continuity. Replace if defective.**
3. Loose or broken wire #24 from base terminal block TB1 to steer left valve coil 4H-24.	**Check continuity. Replace if defective.**
4. Defective steer left valve coil 4H-24.	**Check coil. Replace if defective.**
5. Loose or broken wire #02 from steer left valve coil 4H-24 to base terminal block TB1.	**Check continuity. Replace if defective.**
6. Open diode D24.	**Check diode. Replace if defective.**

4.2-16 Reverse Drive Inoperative

1. Defective reverse switch S7-4 in controller S7.	**Check switch. Replace if defective.**
2. Defective controller S7.	**Check controller. Replace if defective.**
3. Loose or broken wire #A from reverse switch S7-4 to contacts on Lift/Drive select switch between wire #A and wire #15.	**Check continuity. Replace if defective.**

4. Loose or broken wire #15 from Lift/Drive select switch to relay 15CR.	**Check continuity. Replace if defective.**
5. Defective relay 15CR.	**Check relay. Replace if defective.**
6. Loose or broken wire #02 from relay 15CR to base terminal block.	**Check continuity. Replace if defective.**
7. Loose or broken wire #10A from base terminal block to relay 15CR.	**Check continuity. Replace if defective.**
8. Loose or broken wire #15A from relay 15CR to reverse valve coil 4H-15A.	**Check continuity. Replace if defective.**
9. Loose or broken wire #02 from reverse valve coil to base terminal block TB1.	**Check continuity. Replace if defective.**
10. Loose or broken wire #15A from base terminal block TB1 to relay 20ACR2 (In parallel drive only).	**Check continuity. Replace if defective.**
11. Defective relay 20ACR2 (in parallel drive only).	**Check relay. Replace if defective.**
12. Loose or broken wire #15B from relay 20ACR2 to parallel reverse valve coil 4H-15B (in parallel drive only).	**Check continuity. Replace if defective.**
13. Loose or broken wire #02 from base terminal block TB1 to parallel reverse valve coil 4H-15B (in parallel drive only).	**Check continuity. Replace if defective.**
14. Defective parallel reverse valve coil 4H-15B (in parallel drive only).	**Check coil. Replace if defective.**
15. Open diode D15A-1 or D15A-2.	**Check diodes. Replace if defective.**

4.2-17 Forward Drive Inoperative

1. Defective forward switch S7-5 in controller S7.	**Check switch. Replace if defective.**
2. Defective controller S7.	**Check controller. Replace if defective.**
3. Loose or broken wire #B from forward switch S7-5 to contacts on lift/drive select switch between wire #B and wire #16.	**Check continuity. Replace if defective.**
4. Loose or broken wire #16 from lift/drive select switch to relay 16CR.	**Check continuity. Replace if defective.**
5. Defective relay 16CR.	**Check relay. Replace if defective.**
6. Loose or broken wire #02 from relay 16CR to base terminal block.	**Check continuity. Replace if defective.**

7. Loose or broken wire #10A from base terminal block to relay 16CR.	**Check continuity. Replace if defective.**
8. Loose or broken wire #16A from relay 16CR to forward valve coil 4H-16A.	**Check continuity. Replace if defective.**
9. Loose or broken wire #02 from forward valve coil to base terminal block TB1.	**Check continuity. Replace if defective.**
10. Loose or broken wire #16A from base terminal block TB1 to relay 20ACR1 (in parallel drive only).	**Check continuity. Replace if defective.**
11. Defective relay 20ACR1 (in parallel drive only).	**Check relay. Replace if defective.**
12. Loose or broken wire #16B from relay 20ACR1 to parallel forward valve coil 4H-16B (in parallel drive only).	**Check continuity. Replace if defective.**
13. Loose or broken wire #02 from base terminal block TB1 to parallel forward valve coil 4H-16B (in parallel drive only).	**Check continuity. Replace if defective.**
14. Defective parallel forward valve coil 4H-16B (in parallel drive only).	**Check coil. Replace if defective.**
15. Open diode D16A-1 or D16A-2.	**Check diodes. Replace if defective.**

4.2-18 First Drive Speed and Steering Inoperative

1. Loose or broken wire #21 from base terminal block TB1 to relay 17CR.	**Check continuity. Replace if defective.**
2. Defective relay 17CR.	**Check relay. Replace if defective.**
3. Loose or broken wire #18A from relay 17CR to base terminal block TB1.	**Check continuity. Replace if defective.**
4. Loose or broken wire #18A from base terminal block TB1 to relay 28ACR1.	**Check continuity. Replace if defective.**
5. Defective relay 28ACR1.	**Check relay. Replace if defective.**
6. Loose or broken wire #18B from relay 28ACR1 to base terminal block TB1.	**Check continuity. Replace if defective.**
7. Loose or broken wire #18B from base terminal block TB1 to small pump dump valve coil 2H-18B.	**Check continuity. Replace if defective.**
8. Defective small pump dump valve coil 2H-18B.	**Check coil. Replace if defective.**
9. Loose or broken wire #02 from small pump dump coil 2H-18B to base terminal block TB1.	**Check continuity. Replace if defective.**

4.2-19 Second Drive Speed Inoperative

1. Defective second speed switch S7-1 in controller S7.	**Check switch. Replace if defective.**
2. Defective controller S7.	**Check controller. Replace if defective.**
3. Loose or broken wire #19 from controller S7-1 to relay 19CR.	**Check continuity. Replace if defective.**
4. Loose or broken wire #02 from platform terminal block TB1 to relay 19CR.	**Check continuity. Replace if defective.**
5. Defective relay 19CR.	**Check relay. Replace if defective.**
6. Loose or broken wire #10A from base terminal block to high drive/tilt override limit switch LS5.	**Check continuity. Replace if defective.**
7. Incorrectly set or defective high drive/tilt override limit switch LS5.	**Adjust switch. Replace if defective.**
8. Loose or broken wire #35 from high drive/tilt override limit switch LS5 to relay 35CR.	**Check continuity. Replace if defective.**
9. Loose or broken wire #02 from relay 35CR to base terminal block.	**Check continuity. Replace if defective.**
10. Defective relay 35CR.	**Check relay. Replace if defective.**
11. Loose or broken wire #10A from base terminal block TB1 to relay 35CR.	**Check continuity. Replace if defective.**
12. Loose or broken wire #44 from relay 35CR to base terminal block TB1.	**Check continuity. Replace if defective.**
13. Loose or broken wire #44 from base terminal block TB1 to relay 19CR.	**Check continuity. Replace if defective.**
14. Loose or broken wire #17 from relay 19CR to relay 17CR.	**Check continuity. Replace if defective.**
15. Defective relay 17CR.	**Check relay. Replace if defective.**
16. Loose or broken wire #02 from relay 17CR to base terminal block TB1.	**Check continuity. Replace if defective.**
17. Loose or broken wire #17 from relay 17CR to relay 28ACR2.	**Check continuity. Replace if defective.**
18. Loose or broken wire #17A from relay 28ACR2 to base terminal block TB1. (ANSI/CSA)	**Check continuity. Replace if defective.**
19. Defective relay 28ACR2.	**Check relay. Replace if defective.**
20. Loose or broken wire #17A from relay 28ACR2 to relay 28ECR2. (CE)	**Check continuity. Replace if defective.**
21. Defective relay 28ECR2. (CE)	**Check relay. Replace if defective.**

22. Loose or broken wire #17B from relay 28ECR2 to base terminal block TB1. (CE)	**Check continuity. Replace if defective.**
23. Loose or broken wire #17A from base terminal block TB1 to large pump dump valve coil 2H-17A. (ANSI/CSA)	**Check continuity. Replace if defective.**
24. Loose or broken wire #17B from base terminal block TB1 to large pump dump valve coil 2H-17B. (CE)	**Check continuity. Replace if defective.**
25. Loose or broken wire #02 from large pump dump valve coil 2H-17A (ANSI/CSA) or 2H-17B (CE) to base terminal block TB1.	**Check continuity. Replace if defective.**
26. Defective large pump dump valve coil 2H-17A (ANSI/CSA) or 2H-17B (CE).	**Check coil. Replace if defective.**

4.2-20 Third Drive Speed Inoperative

1. Defective third speed switch S7-6 in controller S7.	**Check switch. Replace if defective.**
2. Defective controller S7.	**Check controller. Replace if defective.**
3. Loose or broken wire #18 from third speed switch S7-6 to diode D18 at base terminal block TB1.	**Check continuity. Replace if defective.**
4. Defective diode D18.	**Check diode. Replace if defective.**

4.2-21 High Drive Speed Inoperative

1. Lift/Drive select switch S3 in low drive position.	**Select high drive position on lift/drive select switch.**
2. Defective contacts on lift/drive select switch S3 between wire #08 and wire #20.	**Check continuity through contact. Replace if defective.**
3. Loose or broken wire #20 from lift/drive select switch S3 to relay 20CR.	**Check continuity. Replace if defective.**
4. Loose or broken wire #02 from relay 20CR to base terminal block TB1.	**Check continuity. Replace if defective.**
5. Defective relay 20CR.	**Check relay. Replace if defective.**
6. Loose or broken wire #44 from base terminal block TB1 to relay 20CR.	**Check continuity. Replace if defective.**
7. Loose or broken wire #20A from relay 20CR to relay 20ACR1.	**Check continuity. Replace if defective.**
8. Loose or broken wire #20A from relay 20ACR1 to series/parallel valve coil 4H-20A.	**Check continuity. Replace if defective.**

9. Loose or broken wire #02 from series/parallel valve coil 4H-20A to base terminal block TB1.	**Check continuity. Replace if defective.**
10. Defective series/parallel valve coil 4H-20A.	**Check coil. Replace if defective.**
11. Loose or broken wire #02 from relay 20ACR1 to base terminal block TB1 (forward drive only).	**Check continuity. Replace if defective.**
12. Defective relay 20ACR1 (forward drive only).	**Check relay. Replace if defective.**
13. Loose or broken wire #20A from relay 20CR to relay 20ACR2 (reverse drive only).	**Check continuity. Replace if defective.**
14. Loose or broken wire #02 from relay 20ACR2 to base terminal block TB1 (reverse drive only).	**Check continuity. Replace if defective.**
15. Defective relay 20ACR2 (reverse drive only).	**Check relay. Replace if defective.**

4.2-22 Up Circuit Inoperative from Platform

1. Lift/Drive select switch S3 in drive position.	**Select lift on lift/drive select switch.**
2. Defective contact on lift/drive select switch S3 between wire #B and wire #14.	**Check continuity through contact. Replace if defective.**
3. Defective forward switch S7-5 on controller S7.	**Check switch. Replace if defective.**
4. Loose or broken wire #B from forward switch S7-5 to contact on lift/drive select switch S3.	**Check continuity. Replace if defective.**
5. Loose or broken wire #14 from contact on lift/drive select switch S3 to base terminal block TB1.	**Check continuity. Replace if defective.**

4.2-23 Up Circuit Inoperative from Base Control Console

1. Loose or broken wire #10E from base terminal block TB1 to base/up/down switch S2.	**Check continuity. Replace if defective.**
2. Loose or broken wire #14E from base/up/down switch S2 to base terminal block TB1.	**Check continuity. Replace if defective.**
3. Defective base/up/down switch S2.	**Check switch. Replace if defective.**
4. Open diode D14E-1.	**Check diode. Replace if defective.**
5. Loose or broken wire #10E from base terminal block to control module CM1 at pin #P2-2. (CE)	**Check continuity. Replace if defective.**

4.2-24 Up Circuit Inoperative from Platform or Base Control Console (without Outriggers)

1. Loose or broken wire #14 from base terminal block TB1 to up relay jumper between wire #14 and #14A.	**Check continuity. Replace if defective.**

2. Loose or broken up relay jumper wire between wires #14 and #14A.	**Check continuity. Replace if defective.**
3. Loose or broken wire #14A from up relay jumper to base terminal block TB1.	**Check continuity. Replace if defective.**
4. Loose or broken wire #14 from base terminal block to control module CM1 at pin #P2-3 (CE).	**Check continuity. Replace if defective.**
5. Loose or broken wire #14A from base terminal block TB1 to lift valve coil 3H-14A.	**Check continuity. Replace if defective.**
6. Loose or broken wire #02 from lift valve coil 3H-14A to base terminal block TB1.	**Check continuity. Replace if defective.**
7. Defective lift valve coil 3H-14A.	**Check coil. Replace if defective.**
8. Defective diode D14A-1.	**Check diode. Replace if defective.**

4.2-25 Platform does not Lift from Platform or Base Control Console with Outriggers Retracted (Lift Operates Correctly with Outriggers Extended)

1. Outriggers not fully retracted.	**Fully retract outrigger cylinders.**
2. Loose or broken wire #10A from base terminal block TB1 to pin #4 on connector CN14 at the outrigger board.	**Check continuity. Replace if defective.**
3. Loose or broken wire #10A from outrigger board to outrigger limit switch LS64.	**Check continuity. Replace if defective.**
4. Defective outrigger limit switch LS64.	**Check switch. Replace if defective.**
5. Loose or broken wire #64 from outrigger limit switch LS64 to outrigger board.	**Check continuity. Replace if defective.**
6. Loose or broken wire #64 from outrigger board to outrigger limit switch LS63.	**Check continuity. Replace if defective.**
7. Defective outrigger limit switch LS63.	**Check continuity. Replace if defective.**
8. Loose or broken wire #63 from outrigger limit switch LS63 to outrigger board.	**Check continuity. Replace if defective.**
9. Loose or broken wire #63 from outrigger board to outrigger limit switch LS62.	**Check continuity. Replace if defective.**
10. Defective Limit Switch LS62.	**Check switch. Replace if defective.**
11. Loose or broken wire #62 from outrigger limit switch LS62 to outrigger board.	**Check continuity. Replace if defective.**
12. Loose or broken wire #62 from outrigger board to outrigger limit switch LS61.	**Check continuity. Replace if defective.**
13. Defective outrigger limit switch LS61.	**Check switch. Replace if defective.**

14. Loose or broken wire #61 from outrigger limit switch LS61 to outrigger board.	**Check continuity. Replace if defective.**
15. Open diode D36 on outrigger board.	**Check diode. Replace if defective.**
16. Open diode D36-1 at pin #1 on CN22 on outrigger board.	**Check diode. Replace if defective.**

4.2-26 Platform does not Lift from Platform or Base Control Console with Outriggers Extended

1. Outriggers not extended enough.	**Extend outriggers to take weight off tires (refer to operator section).**
2. Loose or broken wire #10A from base terminal block TB1 to pin #4 on connector CN14 at the outrigger board.	**Check continuity. Replace if defective.**
3. Loose or broken wire #10A from outrigger board to outrigger limit switch LS68.	**Check continuity. Replace if defective.**
4. Defective outrigger limit switch LS68.	**Check switch. Replace if defective.**
5. Loose or broken wire #68A from outrigger limit switch LS68 to outrigger board.	**Check continuity. Replace if defective.**
6. Loose or broken wire #10A from outrigger board to outrigger limit switch LS67	**Check continuity. Replace if defective.**
7. Defective outrigger limit switch LS67.	**Check switch. Replace if defective.**
8. Loose or broken wire #67A from outrigger limit switch LS67 to outrigger board.	**Check continuity. Replace if defective.**
9. Loose or broken wire #10A from outrigger board to outrigger limit switch LS66.	**Check continuity. Replace if defective.**
10. Defective outrigger limit switch LS66.	**Check switch. Replace if defective.**
11. Loose or broken wire #66A from outrigger limit switch LS66 to outrigger board.	**Check continuity. Replace if defective.**
12. Loose or broken wire #10A from outrigger board to outrigger limit switch LS65.	**Check continuity. Replace if defective.**
13. Defective outrigger limit switch LS65.	**Check switch. Replace if defective.**
14. Loose or broken wire #65A from outrigger limit switch LS65 to outrigger board.	**Check continuity. Replace if defective.**
15. Check for power on wire #65 at outrigger control module at pin P2-8.	**If no voltage present, proceed to outrigger control module troubleshooting.**
16. Loose or broken wire #65 from outrigger control module at pin P2-8 to outrigger board.	**Check continuity. Replace if defective.**
17. Open diode D14A-2 at base terminal block TB1.	**Check diode. Replace if defective.**

4.2-27 Platform does not Lift from Platform or Base Control Console with Outriggers Extended or Retracted

1. Defective lift enable relay 65CR.	**Check relay. Replace if defective.**
2. Defective lift disable relay 17DCR.	**Check relay. Replace if defective.**
3. Loose or broken wire #14 from base terminal block TB1 to outrigger/ generator harness connector.	**Check continuity. Replace if defective.**
4. Loose or broken wire #02 from base terminal block TB1 to outrigger/ generator harness connector.	**Check continuity. Replace if defective.**
5. Loose or broken wire #14 from base terminal block to control module CM1 at pin #P2-3 (CE).	**Check continuity. Replace if defective.**
6. Defective up relay 14CR.	**Check relay. Replace if defective.**
7. Loose or broken wire #36A from pin#10 on connector CN14 to up relay 14CR.	**Check continuity. Replace if defective.**
8. Loose or broken wire #14A from up relay 14CR to base terminal block TB1.	**Check continuity. Replace if defective.**

4.2-28 Down Circuit Inoperative from Platform

1. Lift/Drive select switch S3 in drive position.	**Select lift on lift/drive select switch.**
2. Defective reverse switch S7-4 on controller S7.	**Check continuity through switch. Replace if defective.**
3. Loose or broken wire #A from reverse switch S7-4 to contact on lift/drive select switch S3.	**Check continuity. Replace if defective.**
4. Defective contact on lift/drive select switch S3 between wire #A and wire #13.	**Check continuity through contact. Replace if defective.**
5. Loose or broken wire #13 from lift/drive select switch S3 to base terminal block TB1.	**Check continuity. Replace if defective.**
6. Loose or broken wire #13 from base terminal block TB1 to lowering valve 2H-13 or holding valve 2H-13-1 and 2H-13-2.	**Check continuity. Replace if defective.**
7. Loose or broken wire #02 from base terminal block TB1 to lowering valve 2H-13 or holding valve 2H-13-1 and 2H-13-2.	**Check continuity. Replace if defective.**
8. Defective lowering valve coil 2H-13 or holding valve 2H-13-1 and 2H-13-2.	**Check Coil. Replace if defective.**

4.2-29 Down Circuit Inoperative from Base

1. Loose or broken wire #10E from base terminal block TB1 to base up/down switch S2.	**Check continuity. Replace if defective.**
2. Loose or broken wire #13 from base up/down switch S2 to base terminal block TB1.	**Check continuity. Replace if defective.**
3. Defective base up/down switch S2.	**Check switch. Replace if defective.**
4. Loose or broken wire #13 from base terminal block TB1 to lowering valve 2H-13 or holding valve 2H-13-1 and 2H-13-2. (ANSI/CSA)	**Check continuity. Replace if defective.**
5. Loose or broken wire #02 from base terminal block TB1 to lowering valve 2H-13 or holding valve 2H-13-1 and 2H-13-2. (ANSI/CSA)	**Check continuity. Replace if defective.**
6. Defective lowering valve coil 2H-13 or holding valve 2H-13-1 and 2H-13-2. (ANSI/CSA)	**Check Coil. Replace if defective.**

4.2-30 Hydraulic Generator Inoperative

1. Key switch S3 in drive position.	**Turn switch to lift position.**
2. Loose or broken wire #9 from base terminal block TB1 to generator relay 86BCR.	**Check continuity. Replace if defective.**
3. Loose or broken wire #9 from generator relay 86BCR to generator switch S12.	**Check continuity. Replace if defective.**
4. Defective generator switch S12.	**Check switch. Replace if defective.**
5. Loose or broken wire #85 from generator switch S12 to generator relay 86ACR.	**Check continuity. Replace if defective.**
6. Loose or broken wire #86B from generator relay 86ACR to generator relay 86BCR.	**Check continuity. Replace if defective.**
7. Defective relay 86ACR.	**Check relay. Replace if defective.**
8. Defective relay 86BCR.	**Check relay. Replace if defective.**
9. Loose or broken wire #2A from hour meter to relay 86BCR.	**Check continuity. Replace if defective.**
10. Loose or broken wire #86C from generator relay 86BCR to generator relay 86CCR.	**Check continuity. Replace if defective.**
11. Open diode D86C.	**Check diode. Replace if defective.**
12. Loose or broken wire #85 from diode D86C to relay 86ACR.	**Check continuity. Replace if defective.**
13. Loose or broken wire #02 from base terminal block TB1 to relay 86CCR.	**Check continuity. Replace if defective.**
14. Defective relay 86CCR.	**Check relay. Replace if defective.**

15. Loose or broken wire #43 from relay 32CR1 to relay 86CCR.	**Check continuity. Replace if defective.**
16. Loose or broken wire #86D from relay 86CCR to generator valve coil 2H-86D.	**Check continuity. Replace if defective.**
17. Loose or broken wire #02 from base terminal block to generator valve coil 2H-86D.	**Check continuity. Replace if defective.**
18. Defective generator valve coil 2H-86D.	**Check coil. Replace if defective.**
19. Open diode D86D.	**Check diode. Replace if defective.**
20. Loose or broken wire #17A from diode D86D to base terminal block TB1.	**Check continuity. Replace if defective**

4.2-31 Hydraulic Generator does not Shut Off from Generator Switch

1. Defective generator switch S12.	**Check switch. Replace if defective.**
2. Loose or broken wire #86 from generator switch S12 to diode D86.	**Check continuity. Replace if defective.**
3. Open diode D86.	**Check diode. Replace if defective.**
4. Defective relay 86ACR.	**Check relay. Replace if defective.**
5. Loose or broken wire #02 from base terminal block to relay 86ACR.	**Check continuity. Replace if defective.**

4.2-32 All Outriggers Inoperative (Auto-Level and Manual)

⚠ WARNING

Scissors lift must be below high speed limit switch for outriggers to function. Sample warning text.

NOTE

For the outriggers to function the upper control box must be in the lift position and the scissor stack stowed or fully retracted.

1. Loose or broken wire # 44 from base terminal block TB1 to pin #6 on connector CN14 on outrigger board.	**Check for continuity. Replace if defective.**
2. No power at wire #9 at pin #5 on connector CN14 on outrigger board.	**If no power is present check for continuity on wire #9 back to the main terminal block TB1. Replace if defective.**
3. Defective relay 9CR2 or 9CR3 on outrigger board.	**Check relays. Replace if defective.**

4. Open diode D17C-1 on outrigger board.	**Check diode. Replace if defective.**
5. Defective relay 17DCR on outrigger board.	**Check relay. Replace if defective.**
6. Open or defective fuse jumper J17E on outrigger board.	**Check fuse. Replace if defective.**
7. Loose or broken wire # 17A from pin #2 on connector CN14 on outrigger board to terminal block TB1.	**Check for continuity. Replace if defective.**
8. Loose or broken wire #17C at pin #1 or wire #02 at pin #2 on connector CN21 on outrigger board to outrigger holding valve coil 2H-17C.	**Check for continuity. Replace if defective.**
9. Defective outrigger holding valve coil 2H-17C.	**Check coil. Replace if defective.**

4.2-33 All Outriggers Inoperative (Auto-Level and Manual from Platform Controls)

1. Loose or broken wires #35C at pin #1 on connector CN20 on outrigger board through outrigger cables and plugs to the outrigger enable switch S9A in the control box.	**Check for continuity. Replace if defective.**
2. Loose or broken wire #35D from outrigger enable switch S9A to pin #5 on the outrigger control console plug.	**Check for continuity. Replace if defective.**
3. Defective outrigger enable switch S9A.	**Check switch. Replace if defective.**

4.2-34 All Outriggers Inoperative (Base Controls only)

1. Defective outrigger enable switch S9B.	**Check switch. Replace if defective**

4.2-35 All Outriggers Inoperative (Auto Level only)

1. Loose or broken wire #10A at pin #1 of the tilt switch connector to pin P2-12 on the outrigger control module OCM1.	**Check for continuity. Replace if defective.**
2. Loose or broken wire #10A at pin #1 of the tilt switch connector to base terminal block TB1.	**Check for continuity. Replace if defective.**
3. Loose or broken wire # 02 at pin #3 of the tilt switch connector to pin P2-11 on the outrigger control module OCM1.	**Check for continuity. Replace if defective.**
4. Loose or broken wire #02 at pin #3 of the tilt switch connector to base terminal block TB1.	**Check for continuity. Replace if defective.**
5. Defective outrigger control module OCM1.	**Replace.**

4.2-36 All Outriggers Inoperative (Auto Level only)

B: Led Power Indicator Light at Outrigger Control Module (OCM1) Flashing

Flash Code	Probable Cause	Remedy
1/1	1. Outriggers are all up and machine is tilted.	1. Level the machine.
1/2	1. Machine is elevated. 2. Loose or broken wire # 35.	1. Lower the scissor stack below high speed limit switch. 2. Check for input voltage on wire #35 at pin P2-10 of the outrigger control module (OCM1). Replace if defective.
2/2	1. At least one outrigger is not fully retracted. 2. Defective outrigger rod limit switch (LS61, LS62, LS63, LS64) or wiring. 3. Defective diode (D36) on outrigger board.	1. Fully retract all outriggers. 2. Replace defective or damaged switch(es) or wiring. 3. Check for continuity. Replace if defective.
2/1	1. Outriggers are all down and the machine is not fully level.	1. Move machine to less sloped terrain if it will not lift.
5/5	1. Power on wire #70 or #79 at power on. 2. Power on wire #70 or #79 when manually operating outriggers.	1. Check for power on wire #70 or #79 at pin P2-5 or P2-6 of the outrigger control module. Replace defective component. 2. Check for power on wire #70 or #79 while manually operating an outrigger.
5/2	1. Low or no voltage on wire #35c. 2. Loose or broken wire on #35c.	1. Check battery and charging system to ensure minimum 9 volts. 2. Check for input voltage on wire #35c at pin P4-9 of outrigger control module (OCM1).
7/1	1. Excessive vibration. 2. Defective outrigger control module.	1. Outrigger control module cannot read tilt sensor. 2. Replace.
6/6	1. Outriggers are being manually controlled.	1. Indicates function activated. No repair necessary.
7/8	1. Error occured while self diagnosing the hardware fail safe.	1. Turn off power to reset the outrigger control module. Turn power back on and see if the code has cleared. If problem persists, replace outrigger control module.
5/1	1. Low input voltage to outrigger control module.	1. Check for minimum 9 volts between wire #02 at pin P2-11 and wire #10A at pin P2-12 at outrigger control module.
7/7	1. Startup error occurred while self diagnosing.	1. Turn off power to reset the outrigger control module. Turn power back on and see if the code has cleared. If problem persists, replace outrigger control module.
7/5	1. Internal failure of OCM1.	1. Turn off power to reset the outrigger control module. Turn power back on and see if the code has cleared. If problem persists, replace outrigger control module.
7/2	1. Internal failure of OCM1.	1. Turn off power to reset the outrigger control module. Turn power back on and see if the code has cleared. If problem persists, replace outrigger control module.
8/1	1. Internal failure of OCM1.	1. Turn off power to reset the outrigger control module. Turn power back on and see if the code has cleared. If problem persists, replace outrigger control module.
8/2	1. Internal failure of OCM1.	1. Turn off power to reset the outrigger control module. Turn power back on and see if the code has cleared. If problem persists, replace outrigger control module.
8/3	1. Internal failure of OCM1.	1. Turn off power to reset the outrigger control module. Turn power back on and see if the code has cleared. If problem persists, replace outrigger control module.
8/4	1. Internal failure of OCM1.	1. Turn off power to reset the outrigger control module. Turn power back on and see if the code has cleared. If problem persists, replace outrigger control module.
8/5	1. Internal failure of OCM1.	1. Turn off power to reset the outrigger control module. Turn power back on and see if the code has cleared. If problem persists, replace outrigger control module.
7/6	1. Internal failure of OCM1.	1. Turn off power to reset the outrigger control module. Turn power back on and see if the code has cleared. If problem persists, replace outrigger control module.

60416AB

4.2-37 Left Front Outrigger Inoperative Manually

1. Defective left front outrigger switch S20 at platform control console or S20A at base control console.	**Check switch. Replace if defective.**
2. Loose or broken wire #71(up) from outrigger control console to pin #6 (up) on connector CN20 at outrigger board, or wire #75 (down) to pin #7 (down).	**Check continuity. Replace if defective.**
3. Open diode D71 (up) or D75 (down) on outrigger board.	**Check diode. Replace if defective.**
4. Loose or broken wire #71(up) at pin #7 (up) or pin #75 (down) at pin #8 (down) on connector CN21 at outrigger board to valve coil 4H-71 (up) or 4H-75 (down).	**Check continuity. Replace if defective.**
5. Loose or broken wire #02 from valve coil 4H-71 (up) or 4H-75 (down) to pin #2 on connector CN21 at the outrigger board.	**Check continuity. Replace if defective.**

4.2-38 Right Front Outrigger Inoperative Manually

1. Defective right front outrigger switch S21 at platform control console or S21A at base control console.	**Check switch. Replace if defective.**
2. Loose or broken wire #72 (up) from outrigger control console to pin #8 (up) on connector CN20 at outrigger board, or wire #76 (down) to pin #9 (down).	**Check continuity. Replace if defective.**
3. Open diode D72 (up) or D76 (down) on outrigger board.	**Check diode. Replace if defective.**
4. Loose or broken wire #72 (up) at pin #9 (up) or wire #76 (down) at pin #10 (down) on connector CN21 at outrigger board to valve coil 4H-72 (up) or 4H-76 (down).	**Check continuity. Replace if defective.**
5. Loose or broken wire #02 from valve coil 4H-72 (up) or 4H-76 (down) to pin #2 on connector CN21 at the outrigger board.	**Check continuity. Replace if defective.**

4.2-39 Right Rear Outriggers Inoperative Manually

1. Defective right rear outrigger switch S22 at platform control console or S22A at base control console.	**Check switch. Replace if defective.**

2. Loose or broken wire #73(up) from outrigger control console to pin #3 (up) on connector CN20 at outrigger board, or wire #77 (down) to pin #4 (down).	**Check continuity. Replace if defective.**
3. Open diode D73 (up) or D77 (down) on outrigger board.	**Check diode. Replace if defective.**
4. Loose or broken wire #73(up) at pin #4 (up) or wire #77 (down) at pin #5 (down) on connector CN21 at outrigger board to valve coil 4H-73 (up) or 4H-77 (down).	**Check continuity. Replace if defective.**
5. Loose or broken wire #02 from valve coil 4H-73 (up) or 4H-77 (down) to pin #2 on connector CN21 at the outrigger board.	**Check continuity. Replace if defective.**

4.2-40 Left Rear Outriggers Inoperative Manually

1. Defective left rear outrigger switch S23 at platform control console or S23A at base control console.	**Check switch. Replace if defective.**
2. Loose or broken wire #74 (up) from outrigger control console to pin #5 (up) on connector CN20 at outrigger board, or #78 (down) from pin #2 (down).	**Check continuity. Replace if defective.**
3. Open diode D74 (up) or D78 (down) on outrigger board.	**Check diode. Replace if defective.**
4. Loose or broken wire #74(up) at pin #6 (up) or wire #78 (down) at pin #3 (down) on connector CN21 at outrigger board to valve coil 4H-74 (up) or 4H-78 (down).	**Check continuity. Replace if defective.**
5. Loose or broken wire #02 from valve coil 4H-74 (up) or 4H-78 (down) to pin #2 on connector CN21 at the outrigger board.	**Check continuity. Replace if defective.**

4.2-41 Individual Outrigger Functions Inoperative (Auto-Level)

1. Loose or broken wire #71- #75 (depending on function not working) at outrigger control module plug P4 pins 1-8.	**Check connections of outrigger functions not working (refer to Section 5 for pin reference chart). Replace if defective.**
2. No output from outrigger control module OCM1 at plug P4 pins 1-8.	**Turn off power to reset the outrigger control module. Turn power back on and retest. If problem persists, replace outrigger control module.**

4.2-42 Auto-Level Inoperative

1. Loose or broken wire #35D from outrigger enable switch S9A to auto mode outrigger switch S24.	**Check continuity. Replace if defective.**
2. Defective auto mode outrigger switch S24.	**Check switch. Replace if defective.**
3. Loose or broken wire #10A at pin #P2-12 on outrigger control module OCM1.	**Check for power at P2-12. If no voltage present, check continuity of wire. Replace if defective.**
4. Loose or broken wire #44 at pin #P2-10 on outrigger control module OCM1.	**Check for power at P2-10. If no voltage present, check continuity of wire. Replace if defective.**
5. Loose or broken wire #02 at pin #P2-11 on outrigger control module OCM1.	**Check for ground at P2-11. If no ground present, check continuity of wire. Replace if defective.**
6. Loose or broken wire #70 from auto mode outrigger switch S24 to pin #P2-5 on outrigger control module OCM1.	**Check continuity. Replace if defective.**
7. For additional information, refer to sections 4 & 5 Outrigger Control Module – Troubleshooting.	

4.2-43 Auto All Up Inoperative (Retract)

1. Loose or broken wire #35D from outrigger enable switch S9A to auto mode outrigger switch S24.	**Check continuity. Replace if defective.**
2. Defective auto mode outrigger switch S24.	**Check switch. Replace if defective.**
3. Loose or broken wire #10A at pin #P2-12 on outrigger control module OCM1.	**Check for power at P2-12. If no voltage present, check continuity of wire. Replace if defective.**
4. Loose or broken wire #44 at pin #P2-12 on outrigger control module OCM1.	**Check for power at P2-10. If no voltage present, check continuity of wire. Replace if defective.**
5. Loose or broken wire #02 at pin #P2-11 on outrigger control module OCM1.	**Check for ground at P2-11. If no ground present, check continuity of wire. Replace if defective.**
6. Loose or broken wire #79 from auto mode outrigger switch S24 to pin #P2-6 on outrigger control module OCM1.	**Check continuity. Replace if defective.**
7. For additional information, refer to section 5 Outrigger Control Module.	

4.3 Hydarulic System

4.3-1 All Functions Inoperative

1. Hydraulic oil level low.	**Refill tank to proper level.**
2. Defective pump P1.	**Check pump. Repair or replace if defective.**
3. Broken engine to pump coupler.	**Check coupler. Replace if defective.**
4. Relief valve R1 open.	**Check valve. Replace if defective.**

4.3-2 Steering Inoperative

1. Stuck or defective steer right valve 4H-23A or steer left valve 4H-24A.	**Check valves. Replace if defective.**
2. Steer cylinder C7 damaged or bypassing internally.	**Check cylinder. Repair or replace if defective.**

4.3-3 Lift, Steer and First Drive Speed Inoperative

1. Small pump dump valve 2H-18B stuck open.	**Check valve. Repair or replace if defective.**
2. Worn or defective small pump section of pump P1.	**Check pump. Repair or replace if defective.**
3. Check valve CV1 or CV2 stuck.	**Check valves. Clean or replace if defective.**

4.3-4 Second Drive Speed Inoperative

1. Large pump dump valve 2H-17A stuck open.	**Check valve. Repair or replace if defective.**
2. Worn or defective large pump section of pump P1.	**Check pump. Repair or replace if defective.**
3. Check valve CV1 or CV2 stuck.	**Check valves. Clean or replace if defective.**

4.3-5 Drive Inoperative

1. Stuck or defective drive reverse valve 4H-15A or drive forward valve 4H-16A.	**Check valves. Repair or replace if defective.**
2. Defective drive relief valve R5.	**Check valve. Replace if defective.**
3. Stuck or defective main counterbalance valve CB1.	**Check valve. Repair or replace if defective.**
4. Defective drive motor M1, M2, M3 or M4.	**Check motor. Repair or replace if defective.**
5. Free wheeling valve V2 open or defective.	**Close valve. Repair or replace if defective.**
6. Stuck or defective high speed valve 2H-20B.	**Check valve. Repair or replace if defective.**
7. Cushion cylinder C8 bypassing internally.	**Check cylinder. Repair or replace if defective.**

4.3-6 Drive Sluggish

1. Stuck open or defective valve CV3, CV4, CV5, or CV6.	**Check valve. Replace if defective.**
2. Drive relief valve R5 set too low.	**Refer to Section 5 of this manual for setup procedure.**
3. Defective flow divider FD1.	**Check flow divider. Replace if defective.**

4.3-7 Reverse Drive Inoperative

1. Stuck or defective drive valve 4H-15A.	**Check valve. Repair or replace if defective.**

4.3-8 Forward Drive Inoperative

1. Stuck or defective drive valve 4H-16A.	**Check valve. Repair or replace if defective.**

4.3-9 Drive Inoperative When in Low Drive

1. Stuck or defective parallel counterbalance valve CB2.	**Check valve. Replace if defective.**
2. Stuck or defective parallel forward drive valve 4H-16B or parallel reverse valve 4H-15B.	**Check valve. Replace if defective.**

4.3-10 Drive Inoperative When in High Drive

1. Stuck or defective series/parallel valve 4H-20A.	**Check valve. Replace if defective.**
2. Stuck or defective main counterbalance valve CB1.	**Check valve. Replace if defective.**

4.3-11 Brakes Does not Release

1. Stuck or defective brake valve 3H-30.	**Check valve. Repair or replace if defective.**
2. Stuck or defective auto reset valve V6.	**Check valve. Repair or replace if defective.**

4.3-12 Up Circuit Inoperative

1. Stuck or defective lift valve 3H-14A.	**Check valve. Repair or replace if defective.**
2. Incorrectly adjusted or defective lift relief valve R2.	**Adjust valve. Replace if defective.**
3. Stuck or defective lowering valve 2H-13	**Check valve. Repair or replace if defective.**
4. Stuck or defective manual lowering valve V1.	**Check valve. Repair or replace if defective.**
5. Open manual override on holding valve 2H13-1 or 2H13-2.	**Depress and turn manual override clockwise to close. Replace if defective.**
6. Stuck holding valve 2H13-1 or 2H13-2.	**Check valves. Repair or replace if defective.**

4.3-13 Down Circuit Inoperative

1. Stuck or defective lowering valve 2H-13.	**Check valve. Repair or replace if defective.**
2. Stuck holding valve 2H13-1 or 2H13-2.	**Check valves. Repair or replace if defective.**
3. Plugged lowering orifice O1.	**Clean or replace orifice.**

4.3-14 Hydraulic Generator Inoperative	
1. Stuck or defective hydraulic generator valve 2H-86D.	**Check valve. Repair or replace if defective.**
2. Non-adjusted or defective flow control valve FC1.	**Adjust valve. Replace if defective.**
3. Stuck or defective large pump dump valve 2H-17A.	**Check valve. Repair or replace if defective.**
4. Defective hydraulic generator hydraulic motor GM1.	**Check motor. Repair or replace if defective**
4.3-15 All Outriggers Inoperative	
1. Stuck or defective outrigger holding valve 2H-17C.	**Check valve. Repair or replace if defective.**
4.3-16 Left Front Outriggers Inoperative	
1. Stuck or defective retract valve 4H-71 or extend valve 4H-75.	**Clean valve. Replace if defective.**
2. Stuck or defective check valve CV7.	**Check valve. Replace if defective.**
3. Bypassing outrigger cylinder C9.	**Repack cylinder. Replace if defective.**
4.3-17 Right Front Outriggers Inoperative	
1. Stuck or defective retract valve 4H-72 or extend valve 4H-76.	**Clean valve. Replace if defective.**
2. Stuck or defective check valve CV8.	**Check valve. Replace if defective.**
3. Bypassing outrigger cylinder C10.	**Repack cylinder. Replace if defective**
4.3-18 Right Rear Outriggers Inoperative	
1. Stuck or defective retract valve 4H-73 or extend valve 4H-77.	**Clean valve. Replace if defective.**
2. Stuck or defective check valve CV9.	**Check valve. Replace if defective.**
3. Bypassing outrigger cylinder C11.	**Repack cylinder. Replace if defective.**
4.3-19 Left Rear Outriggers Inoperative	
1. Stuck or defective retract valve 4H-74 or extend valve 4H-78.	**Clean valve. Replace if defective.**
2. Stuck or defective check valve CV10.	**Check valve. Replace if defective.**
3. Bypassing outrigger cylinder C12.	**Repack cylinder. Replace if defective**
4.3-20 Outriggers Drift In	
1. Defective check valve left front CV7, right front CV8, right rear CV9 or left rear CV10.	**Clean valve. Replace if defective.**

2. Outriggers cylinder bypassing left front C9, right front C10, right rear C11 or left rear C12.	**Repack cylinder. Replace if defective.**

Section 5 – Service Procedures

5.1 General

The following information is provided to assist you in the use and application of servicing and maintenance procedures contained in this chapter.

5.1-1 Safety and Workmanship

Your safety, and that of others, is the first consideration when engaging in the maintenance of equipment. Always be conscious of weight. Never attempt to move heavy parts without the aid of a mechanical device. Do not allow heavy objects to rest in an unstable position. When raising a portion of the equipment, ensure that adequate support is provided.

5.1-2 Hydraulic System

All service and repairs to the hydraulic system or hydraulic components must be done in a clean work environment. See Hydraulic System & Component Maintenance and Repair on page 13.

5.2 Base

5.2-1 Winching and Towing Procedures and Parking Brake System

This section provides the operator with procedures about towing and winching and on how to manually release the parking brake.

⚠ WARNING

Ensure platform is fully lowered before winching or towing. Sudden motion could cause the aerial platform to become unstable. Death or serious injury could result.

⚠ WARNING

In emergency situations where machine functions are not available and lowering is impeded by an obstacle, the utmost care must be taken to move the machine far enough to clear the obstacle. In such cases operation must be extremely smooth with no sudden movements and must not exceed a speed of 2 in/sec. When pushing, towing or winching, do not exceed 2 mph (3.2 km/h).

Do not push, tow or winch vehicle onto a slope, or brake the towing vehicle rapidly. Do not pull the aerial platform down an incline towards a winch.

5.2-2 Release the Free-Wheeling Valve

- Make sure that the aerial platform is on level ground. Chock or block the wheels to keep aerial platform from rolling.

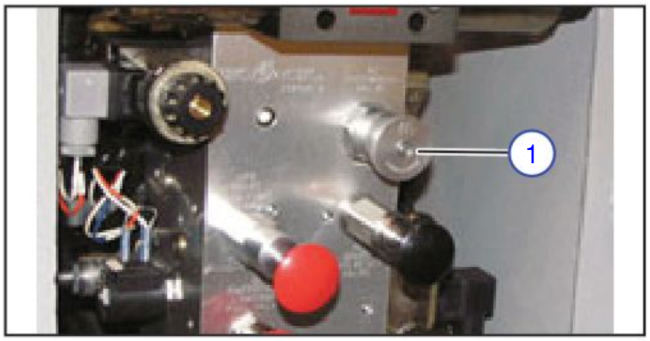

Figure 02 *Free-Wheeling Valve*

- Turn the free-wheeling valve knob counterclockwise to a fully open position to provide *free-wheeling.* This allows hydraulic oil to flow freely through the wheel motors.

⚠ WARNING

The free-wheeling valve must be closed tightly (clockwise) for normal operation.

5.2-3 To Release the Parking Brakes Manually

⚠ WARNING

Do not manually disengage the parking brakes if the aerial platform is on a slope.

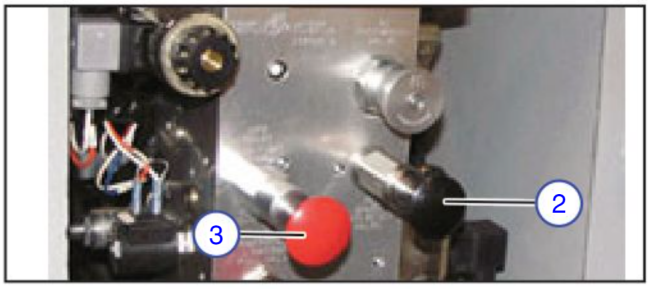

Figure 03 *Disc Brakes System*

Parking Brakes – The brakes must be manually disengaged for pushing, towing or winching.

1. Make sure that the aerial platform is on level ground. Chock or block the wheels to keep aerial platform from rolling.
2. Turn main power disconnect switch to off position.
3. Locate brake hand pump and brake auto reset valve at main manifold in hydraulic/fuel cabinet.
4. Push in brake auto reset valve (2).
5. Grasp the red hand pump (3) and rapidly depress until firm resistance is felt. The brakes are now released.
6. Remove the wheel chocks or blocks, then push, tow or winch the aerial platform to the desired location.

⚠ WARNING

The parking brake MUST be re-engaged immediately after reaching the desired location.

7. Position the machine on a firm and level surface.
8. Chock or block the wheels to prevent the aerial platform from rolling.
9. Re-engage the parking brakes by pulling out the black brake valve plunger.

5.2-4 Wheel Bolt / Nut Inspection and Torquing Procedure

It is necessary to check the torque on all wheel nuts and wheel bolts at pre-delivery, after 8 hours of operation and at weekly intervals using the following procedure:

1. Confirm that each wheel fastener is torqued to 90 ±5 ft•lb. All fasteners must be torqued using the tightening sequence below.

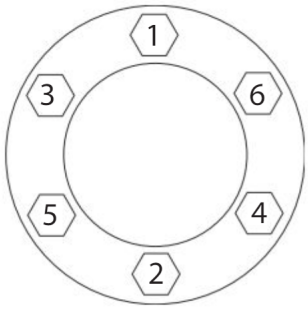

Figure 04 *Wheel Torque Sequence*

2. Re-torque as necessary until all fasteners are properly torqued.

5.2-5 Wheel Reinstallation and Torquing Procedure

When a Wheel/Tire Assembly has been removed or replaced, it will be necessary to follow the procedure below to ensure proper installation:

1. Inspect wheel fastener threads for damage and defects. Replace if defective.
2. Clean the mounting surfaces of hub and the wheel rim of debris, rust, excess paint, etc.
3. Mount wheel on the hub, centering mounting holes on the wheel studs or bolt holes. Use appropriate lifting device as required.
4. Install wheel nuts or wheel bolts and hand tighten to center the rim.
5. Tighten nuts or bolts to approximately 50 ft•lb torque using the tightening sequence in Figure 04.
6. Tighten to 90 ft•lb using the same sequence.
7. Repeat the torque sequence to confirm that none have changed from 90 ft•lb. If any are found below 90 ft•lb, repeat complete sequence until there is no change in torque values. If possible, drive the machine prior to checking torques.
8. Check torque values after 8 hours of operation and then at weekly intervals.

5.2-6 Reconnecting the Platform Control Box for Use from the Ground

1. To facilitate servicing the aerial platform, the platform control box may be removed from the platform, and reconnected inside the hydraulic cabinet, to allow functions to be accessed from the ground.
2. From the platform, remove the quick release pins securing the platform control box to the control box mount and cable guides.
3. Disconnect the control box cable from the scissor control cable (swing down the small latch on the side of the connector and pull the connectors apart). The connectors are located near the front right corner of the platform on the underside.

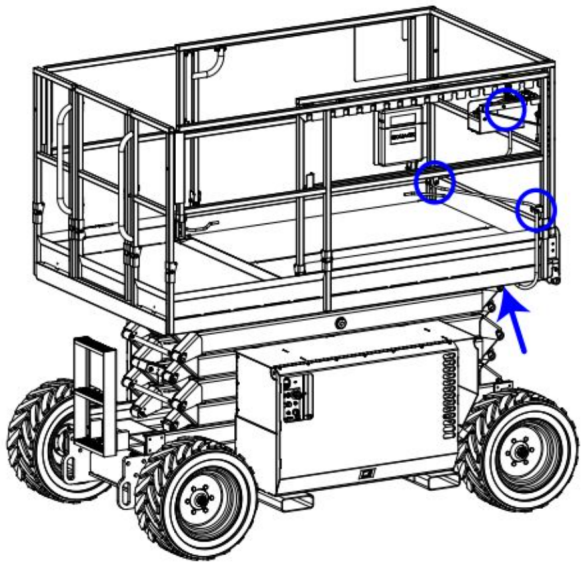

Figure 05

4. Bring the control box down from the platform to the ground.
5. Locate the control cable connectors inside the engine cabinet.

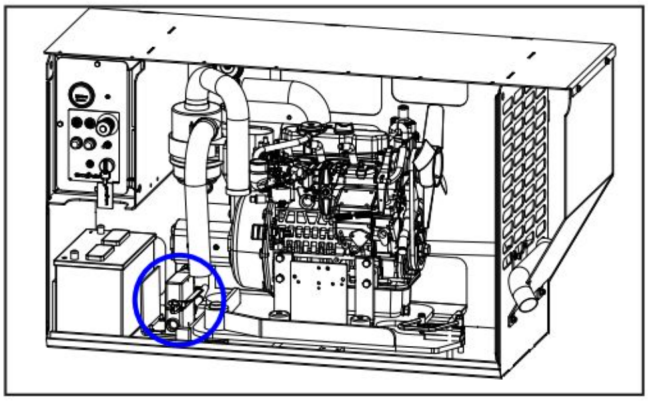

Figure 06

6. Disconnect the existing control cable connector by swinging down the latch on the side, and pulling the connectors apart.

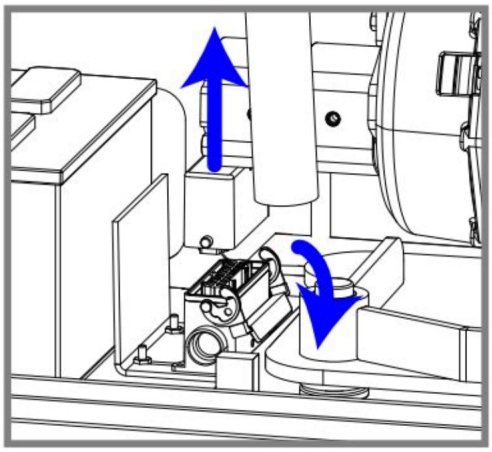

Figure 07

7. Plug the control box control cable connector in its place. Swing up the latch to lock them together.

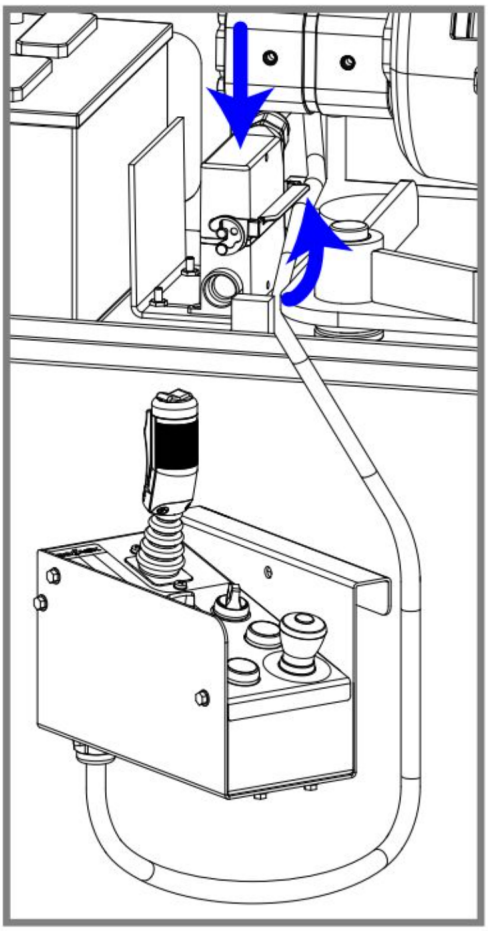

Figure 08

8. The control box functions may now be accessed from the base.

5.2-7 Tightening and Torque Recommendations for Hydraulic Couplings and Hoses

General Work Practices

1. All components must be free of damage or contamination. O-rings cannot be reused anytime the component has been installed beyond finger tight. Clean or replace components, as required.
2. Over tightening a coupling may result in overstressing and/or cracking, and may lead to leaking or failure.

3. When tightening hose couplings, ensure the hose does not twist on the adapter. Twisting will shorten hose life and scar the sealing surfaces of swivel type couplings (JIC, 45°, etc.), which can create leaks.
4. When tightening hose couplings, use a torque wrench (with crow's foot) on the hose end hex swivel nut, and a standard box wrench on the hose end stem hex to hold the hose from twisting.

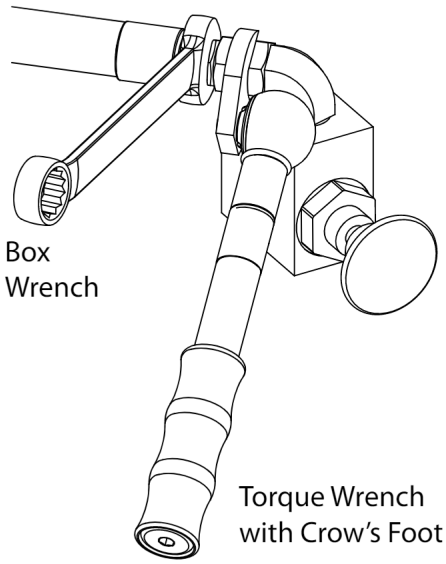

Figure 09

5. Lubricate all O-ring surfaces with suitable hydraulic oil prior to installation in the flange head and O-ring seal grooves. This will minimize the possibility of damage to the O-ring when installed.
6. Install any 45° and 90° hydraulic hose ends first, then align direction and tighten. Adjust the swivel nut on the straight hose end before tightening to create the desired flow.

Using a Torque Wrench

1. This method is applicable for JIC (37°) and FFOR (Flat Face O-ring) hose ends and fittings, wherever the components are accessible with torque wrench / crow's foot tools.
2. Align the hose end or fitting to the mating component.
3. Install the nut two or three turns by hand to assure proper alignment. Jiggle the hose while tightening to ensure the faces contact fully.
4. Using a properly calibrated torque wrench, tighten the coupling using a smooth, even motion until an indication (audible click) is heard and felt. Do NOT over tighten. For recommended torque values. Refer to 2.9 Torque Specifications for Hydraulic Couplings & Hoses.
5. Apply a drop of torque seal to the connection.

5.2-8 Torquing Using the Flats-From-Wrench-Resistance Method

This method is applicable for JIC (37°) and FFOR (Flat Face O-ring) hose ends only, wherever the components are inaccessible with torque wrench/ crow's foot tools, or when a properly calibrated torque wrench is not available.

1. Align the hose end or fitting to the mating component.
2. Install the swivel hose end nut hand tight to the fitting to assure proper alignment. Jiggle the hose while tightening to ensure the faces contact fully.
3. Tighten the nut using a box wrench until minor resistance is felt.
4. Mark the position of the nut relative to the fitting with a marking device (paint marker).

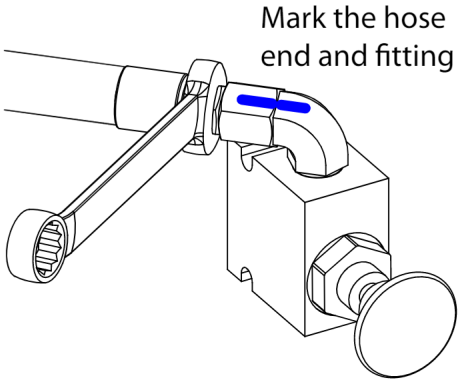

Figure 10

5. Referencing the following table, use a second box wrench to tighten the nut the appropriate number of flats past the mark. Do NOT over tighten.

FLATS FROM WRENCH RESISTANCE CHART for JIC Hose Ends			
Size		FFWR	
Dash	Frac. (in.)	37° Tube Nut	Swivel Nut
-4	1/4"	2	1.5
-5	5/16"	2	2
-6	3/8"	1.5	1.5
-8	1/2"	1.5	1.25
-10	5/8"	1.5	-
-12	3/4"	1.25	-
-16	1"	1	-
-20	1 1/4"	1	-
-24	1 1/2	1	-
-32	2"	1	-

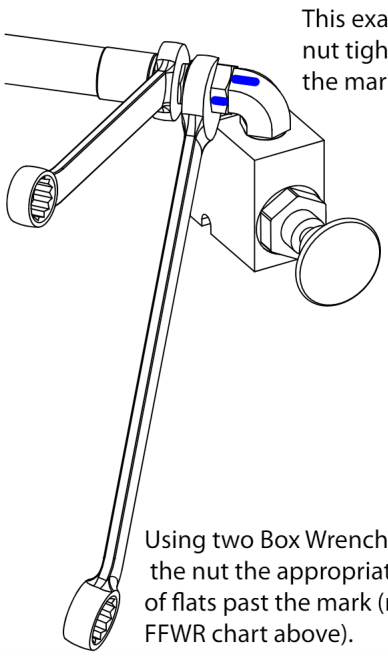

Figure 11

6. Apply a drop of torque seal to the connection.

5.2-9 Checking the Holding Valve

1. Raise the platform to an approximate height of 13 ft (4 m).
2. Locate the emergency lowering valve in the cutout on the front of the tank side cabinet.
3. Pull the knob, and hold it. If the platform does not lower with the knob pulled out, the holding valves are in good working condition. If however the platform lowers, the holding valves must be replaced.

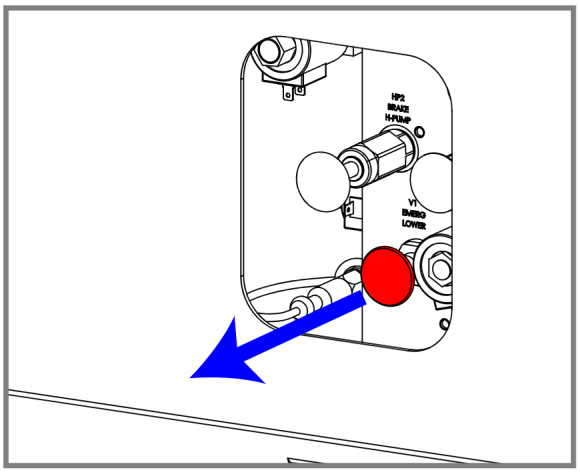

Figure 12

5.2-10 System Pressure Setting

Checking the Pressure

1. Bring the control box down from the platform to the ground so it will be accessible while working (Refer to 5.2-6 Reconnecting the Platform Control Box for Use from the Ground).
2. Refer to the aerial platform's serial plate for the correct system pressure for the unit.
3. Connect a pressure gauge to the quick disconnect fitting located on the lift side of the main manifold in the tank side cabinet.

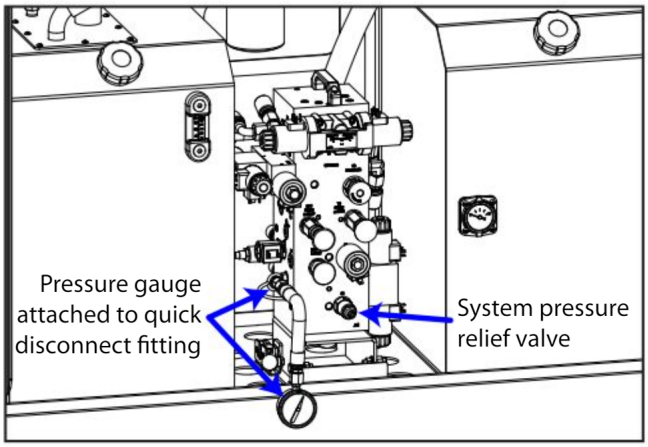

Figure 13

4. With the engine on, use the control box joystick to steer fully left or right to produce pressure. Read the pressure on the gauge.
5. If the pressure shown on the gauge matches that on the serial plate, no further action is needed. However, if it does not match that on the serial plate, proceed to the next step.

5.2-11 Adjusting the Pressure

1. Loosen the jam nut (counterclockwise) on the system pressure relief valve.
2. Still steering fully left or right to create pressure, turn the system relief valve adjustment screw clockwise to raise the pressure, or counterclockwise the lower the pressure, until it matches the value given on the serial plate.

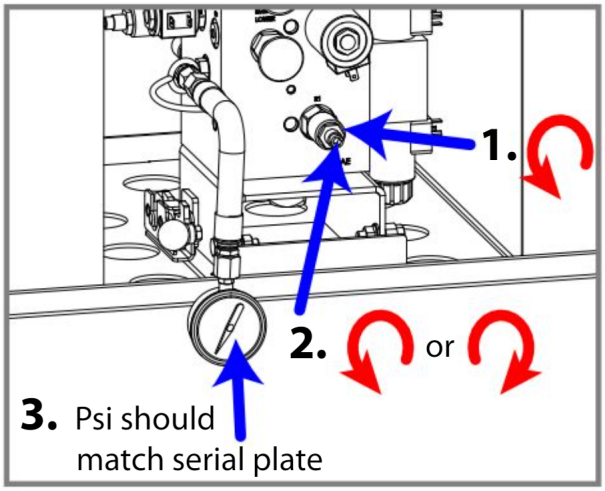

Figure 14

3. Tighten the jam nut and apply a dab of torque seal where the jam nut and adjuster screw meet.
4. Remove the pressure gauge and reconnect the control box to the platform.

5.2-12 Lift Pressure Setting

Checking the Pressure

1. Bring the control box down from the platform to the ground so it will be accessible while working (Refer to 5.2-6 Reconnecting the Platform Control Box for Use from the Ground).
2. Refer to the aerial platform's serial plate for the correct lift pressure for the unit.
3. The lift manifold hose and port is located on the rear side of the main manifold in the tank side cabinet. To access it, release the latch beside the manifold, then using the handle, tip the manifold forward.
4. With an oil pan and rag handy, disconnect the hose, capping off or plugging both the hose and the fitting on the manifold.

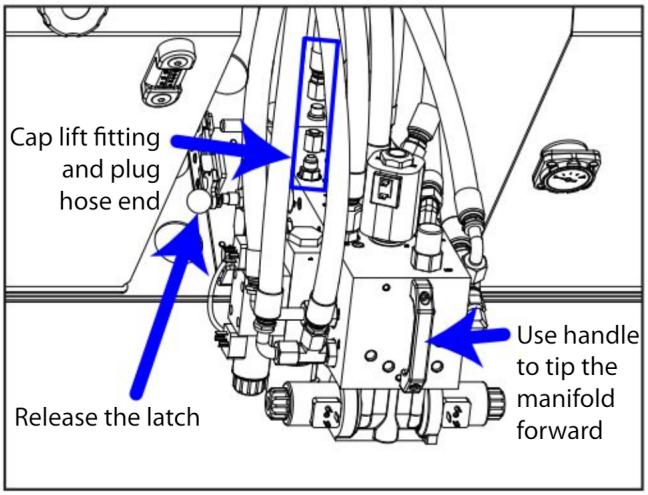

Figure 15

5. Connect a pressure gauge to the quick disconnect fitting located on the top of the main manifold.

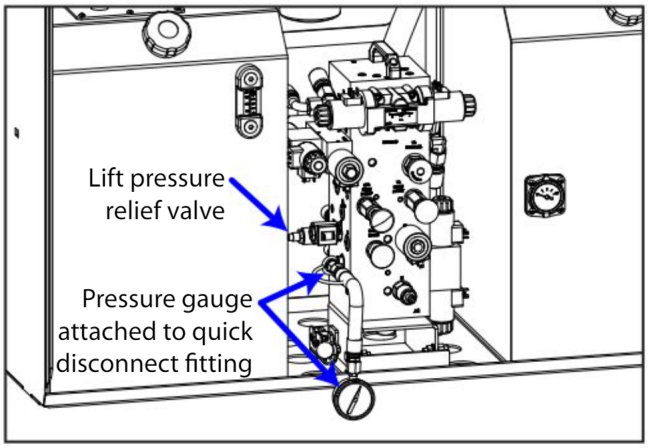

Figure 16

6. To create pressure, with the engine on and the lift/off/lower switch in the lift position, tilt the joystick forward, as though trying to raise the platform. Read the pressure on the gauge.
7. If the pressure shown on the gauge matches that on the serial plate, no further action is needed. However, if it does not match that on the serial plate, proceed to the next step.

Adjusting the Pressure

8. Continuing from Step 6 above, loosen the jam nut (counterclockwise) on the lift pressure relief valve.
9. With the joystick still forward as though attempting to raise the platform, turn the lift relief valve adjustment screw clockwise to raise the pressure, or counterclockwise the to lower the pressure, until it matches the value given on the serial plate.

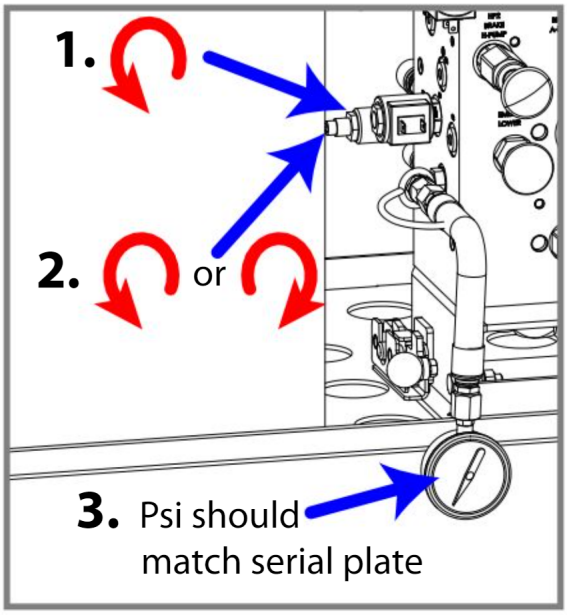

Figure 17

10. Tighten the jam nut and apply a dab of torque seal where the jam nut and adjuster screw meet.
11. Reconnect the lift hose to the main manifold lift port (Refer to 5.2-7 Tightening and Torque Recommendations for Hydraulic Couplings and Hoses).
12. Remove the pressure gauge and reconnect the control box to the platform.

5.2-13 Grease Points

Grease Fitting Locations

There are either 1 or 5 grease fittings on the 6826 RT / 6832 RT, depending on options. They are located:

- On the stationary end of the steer cylinder (1 fitting per unit).
- On each outrigger foot (1 fitting per outrigger, if equipped, 4 per unit).

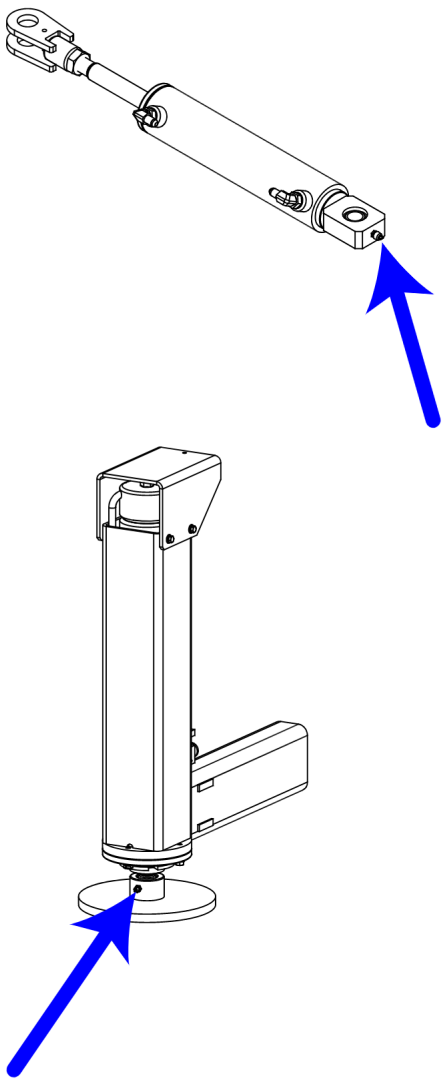

Figure 18

Applying Grease

1. Remove the cap from the grease fitting.
2. Using a clean rag, wipe off any dirt or debris from the grease fitting.
3. Connect a grease gun to the grease fitting, and pump until a small amount of grease can be seen coming out around the joint or bearing.
4. Disconnect the grease gun.
5. Wipe off any excess grease from around the joint or bearing, and from the grease fitting.
6. Replace the grease fitting cap.

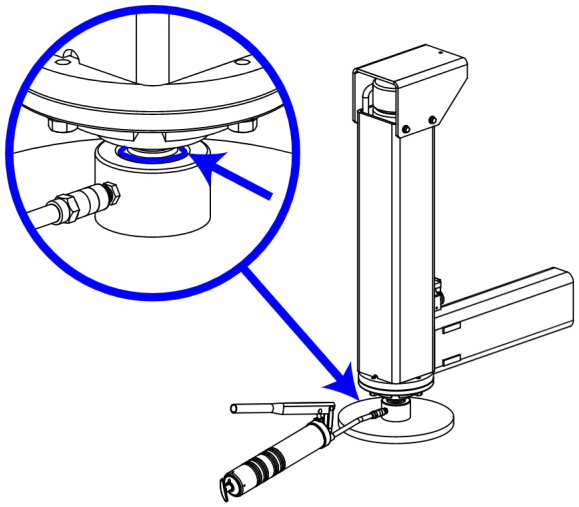

Figure 19

5.2-14 Electronic Tilt Switch Setup Procedure

Machines that are not equipped with outriggers have an electronic tilt switch located inside the engine compartment. During operation, the switch monitors machine tilt front to back, and side to side. Aerial platform tilt is measured relative to a learned *zero* position.

The zero position is calibrated using the following set-up procedure, based on the position of the machine with the platform leveled and fully lowered.

Two LED indicator lights on the top of the switch show operating conditions.

Tilt Switch Replacement

Follow this procedure to install and program a new zero position in a replacement tilt switch.

NOTE

Make sure part number of old and new tilt switch are the same.

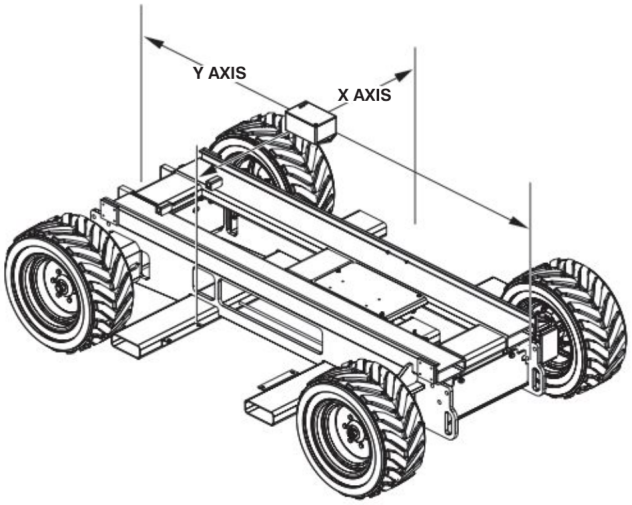

Figure 20

1. Park aerial platform on a firm level surface.
2. Fully lower the platform.
3. Chock or block wheels to keep the aerial platform from rolling forward or backward.
4. Push in emergency stop buttons and turn main power disconnect switch off.
5. Disconnect tilt switch from 4 pin connector.
6. Remove old tilt switch from mount.
7. Install the new switch in the same orientation as the old switch. Connect switch plug to 4 pin connector.

NOTE

The tilt switch circuit is only powered when controls are powered up.

8. Turn main power disconnect switch on.
9. Select Off–Lift–Drive key switch to *Lift* position or *Drive* position.
10. Pull out all emergency stop buttons.
11. Verify switch is powered. The red and green LED indicator lights should be flashing.
12. On the back side of the switch, press and release the Set-up button 3 times.

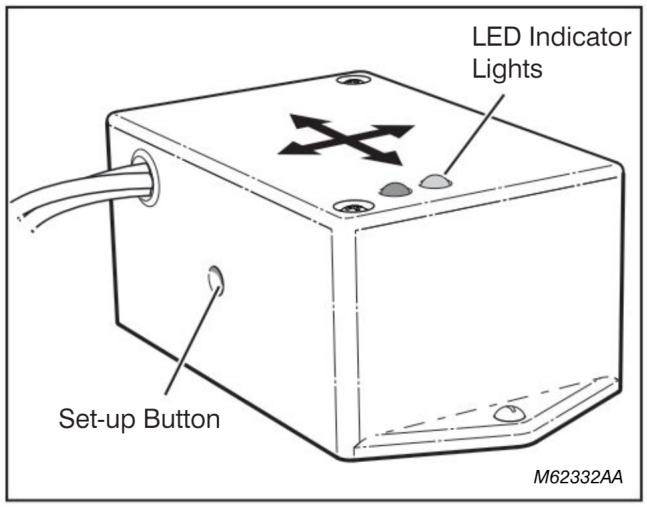

Figure 21

13. The red LED then flashes for 4 seconds during a *stabilization* period.
14. Both LEDs then flash for 1 second, indicating the switch is learning the new *zero* position.
15. When both LEDs are on continuously, it indicates the switch has learned the new zero position.

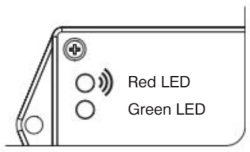

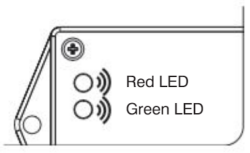

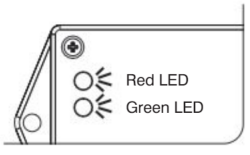

16. The green LED then flashes and the red LED stays on for 2 seconds indicating the switch is verifying the new zero position.
17. The green LED stays on continuously indicating the switch is ready for normal operation.
18. Turn main power disconnect switch off.
19. Push in all emergency stop buttons.
20. Remove wheel chocks.

Reprogramming Existing Tilt Switch

Follow this procedure to reprogram an existing tilt switch. Reprogramming the switch records a new *zero* position.

1. Park aerial platform on a firm level surface.
2. Fully lower the platform. Reprogramming the switch learns
3. Chock or block wheels to keep the aerial platform from rolling forward or backward.

NOTE
The tilt switch circuit is only powered when controls are powered up.

4. Turn main power disconnect switch on.
5. Select Off–Lift–Drive key switch to *Lift* position or *Drive* position.
6. Pull out all emergency stop buttons.
7. Verify switch is powered. The red and green LED indicator lights should be flashing.
8. On the back side of the switch, press and hold the Set-up button for 3 seconds.

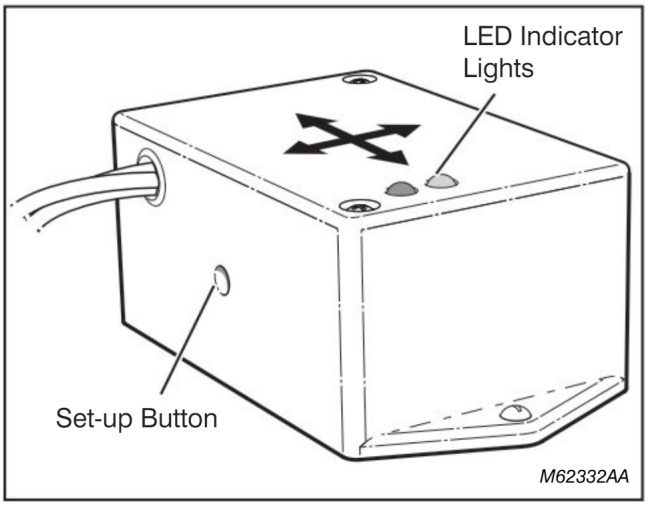

Figure 22

9. Both LEDs turn off, then begin flashing for a 5 second period.
10. During this 5 second period, press and release the Set-up button 3 times.
11. The red LED then flashes for 4 seconds during a *stabilization* period.
12. Both LEDs then flash for 1 second indicating the switch is learning the new *zero* position. When both LEDs are on continuously, it indicates the switch learned the new zero position.
13. The green LED then flashes and the red LED stays on for 2 seconds indicating the switch is verifying the new zero position.
14. The green LED stays on continuously indicating the switch is ready for normal operation.

NOTE
If the Set-up button is not pressed 3 times during Step 10, the switch exits the program mode and returns to normal operation using the previous zero point.

15. Turn main power disconnect switch off.
16. Push in all emergency stop buttons.
17. Remove wheel chocks.

Tilt Switch LED Operation

The following describes LED operation with the system powered.

Green LED on	The green LED on continuously indicates normal operation. Both tilt axes are within the specified degrees of the learned zero position. The green LED flashing indicates the aerial platform is moving in or out of tilt angle limits. The time delay has not occurred yet.
Red LED on	The red LED is on continuously when the tilt angle on one or more axes is off more than the allowable degrees from the zero position.
Green and Red LEDs on	Both LEDs on continuously indicates a fault in the system is detected. The switch does not function. After a period of 5 seconds or on power up, the switch attempts to return to normal operation. If the fault is still detected, both LEDs remain on.

5.3 Engine

5.3-1 Kubota Dual Fuel (DF972 / WG752) Resistance Checks

Resistance of Pick-Up Sensor

1. Disconnect the connector.
2. Measure the resistance with the ohmmeter.
3. If the resistance is not within the factory specifications, replace it.

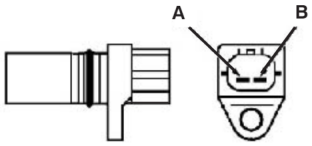

Resistance Factory Spec.	**A – B**	1.85 to 2.45 Ω at 20°C

Resistance of Ignition Coil

1. Disconnect the connector.
2. Measure the resistance with an ohmmeter.
3. If the resistance is not within the factory specifications, replace it.

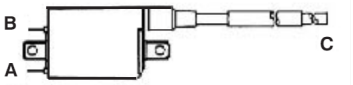

Resistance Factory Spec.	**A – B**	1.87 to 2.53 Ω at 20°C
	A – C	10.4 to 15.6 Ω at 20°C

A: Terminal (+) C: High Tension Cord

B: Terminal (–)

Resistance of Ignitor

1. Disconnect the connector.
2. Measure the resistance with an ohmmeter.
3. If the resistance is not within the factory specifications, replace it.

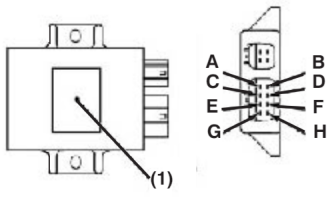

IMPORTANT

To replace the ignitor with a service part, make sure the ignitor has the same part cord No / ID mark as the old one. (See the information label 1.)

5.3-2 Fan Belt Replacement and Adjustment

Kubota recommends inspecting the fan belt every 100 hours, and replacing it every 500 hours.

Inspect the Fan Belt for Wear

1. Inspect the fan belt for any signs of damage, such as cracks or tears. Inspect the fan belt for signs of wear, which may include the belt sinking into the pulley groove.

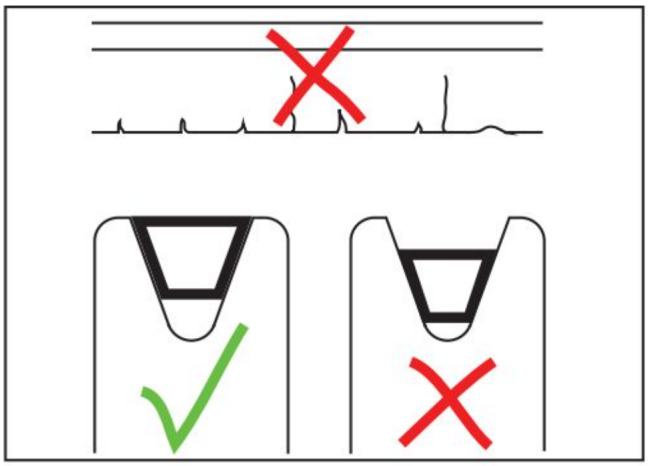

Figure 23

2. If damage or wear is found, replace the fan belt as described in the next section.

Replace the Fan Belt

1. Remove the alternator pulley cover, and loosen the alternator adjustment bolt.
2. Remove the old fan belt, and install a new one.
3. Replace the alternator pulley cover, and tighten the adjustment bolt.
4. Measure and adjust the fan belt deflection as described in the next section.

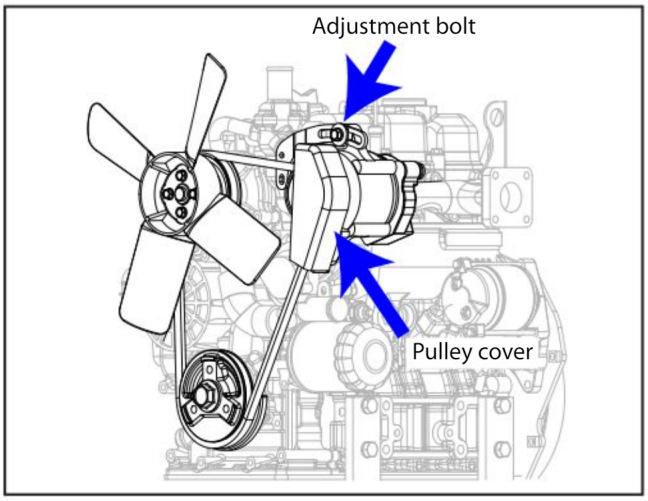

Figure 24

Test and Adjust the Deflection

1. Measure the fan belt deflection by depressing the belt halfway between the fan drive pulley and the alternator pulley, at about 22 ft•lb (98 N•m) of force.

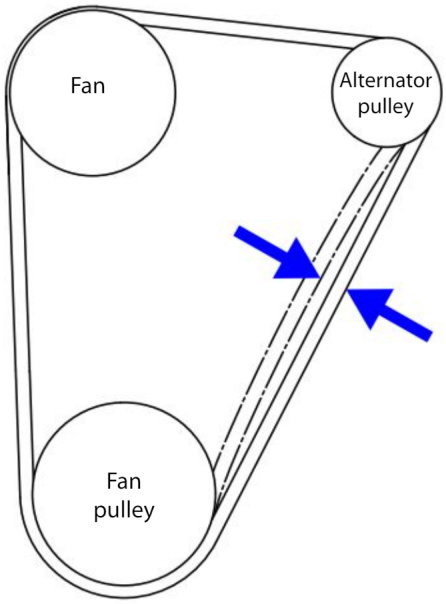

Figure 25

2. If the deflection is greater than or ¼–5⁄16 in (7–9 mm), loosen the alternator adjustment bolt. Use a pry between the alternator and engine block to adjust the position of the alternator. Tighten the bolt.

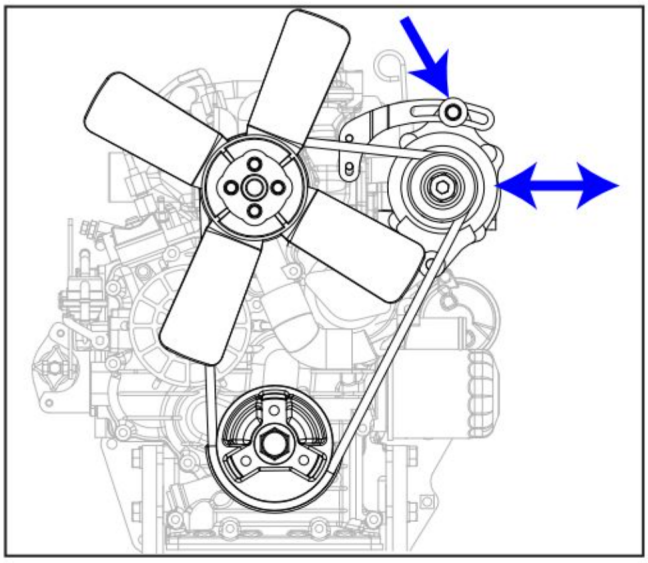

Figure 26

3. Retest the deflection, and continue to adjust as needed until it falls within the range specified above.

5.3-3 Kubota Dual Fuel (DF972 / WG752) Engine Throttle Setting

Preparation

1. Look for a piece of reflective tape on the fan belt pulley. If the reflective tape is missing, attach a small piece.
2. When measuring the engine speed using a digital tachometer, aim the tachometer at this reflective strip while the engine is running.

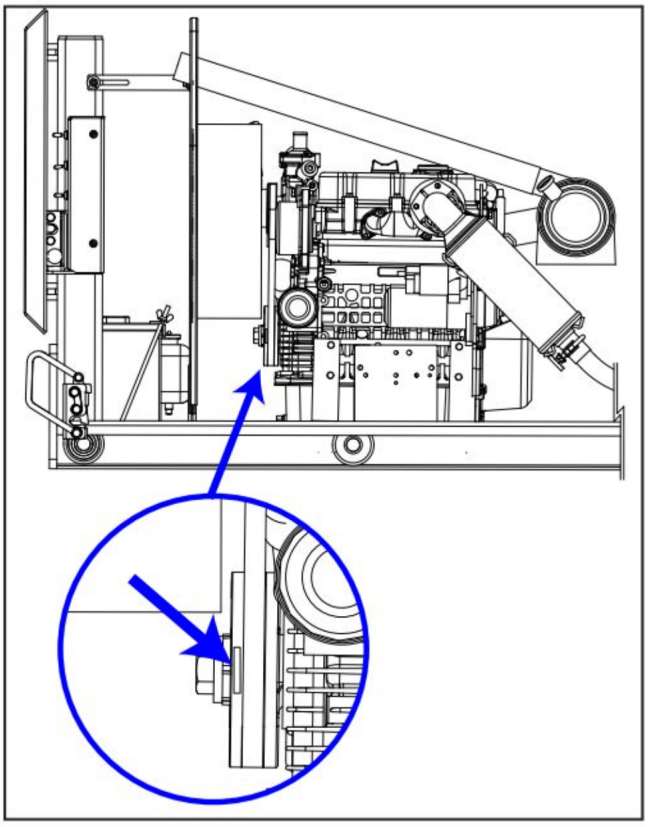

Figure 27

3. On the platform control box, set the low/high throttle switch to low. Start the engine and let it run until it reaches normal operating temperature.

High Throttle Check and Setting

1. Push the solenoid plunger in, and hold it there. Measure the rpm using a digital tachometer, as described in Step 2.

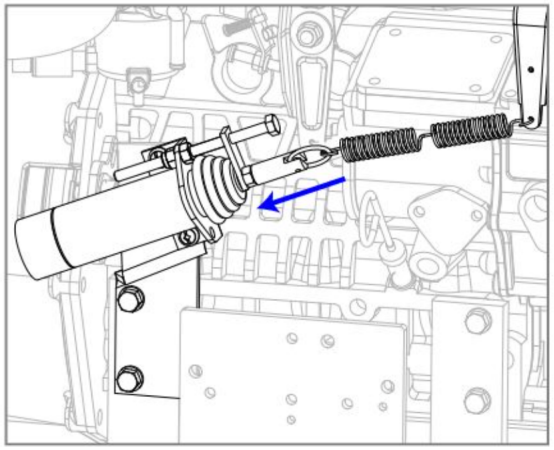

Figure 28

2. If the tachometer reads 3500 ±50 rpm , the high throttle rpm is already properly set. Skip to Step 8 to check the low throttle rpm. If the tachometer reading is outside of the range given above, proceed to the next step to adjust it.
3. Adjust the length of the stroke by first loosening the jam nut, then turning the threaded link and measuring the rpm until it reaches 3500 ±50 rpm.
4. Once the correct rpm is reached, apply a drop of Loctite 242 to the thread, and tighten the nut against the threaded link. Use vice grips to hold the link stationary, and a wrench to tighten the nut.

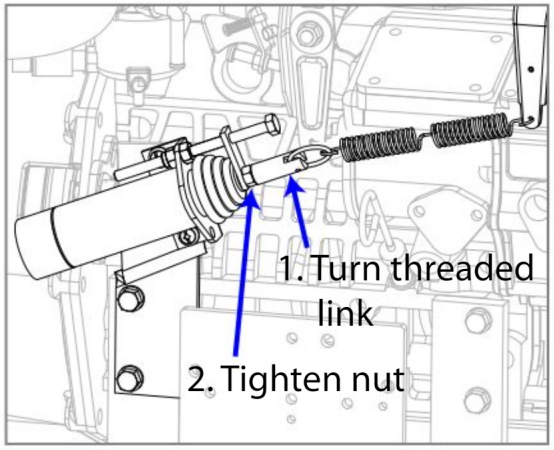

Figure 29

Low Throttle Check and Setting

5. Measure the rpm using a digital tachometer, as described in Step 2.
6. If the tachometer reads 2050 ±50 rpm , the low throttle is already properly set. No further action is required. If the tachometer reading is outside of the correct range, proceed to the next step to adjust it.
7. Adjust the length of the long threaded bolt by turning the locknut and measuring the low throttle rpm until it reaches 2050 ±50 rpm.
8. Once the correct rpm is reached, apply a drop of Loctite 242 to the thread of the long bolt. Tighten the jam nut.

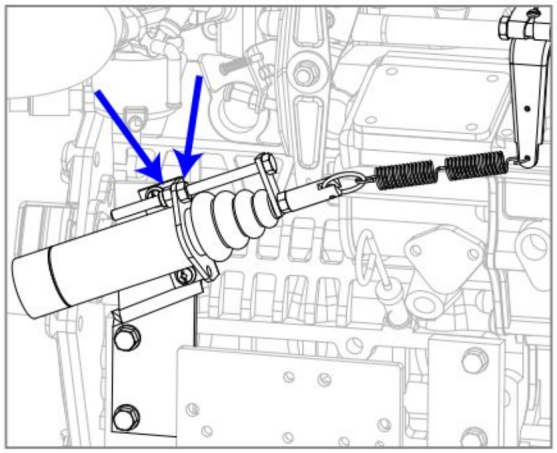

Figure 30

5.3-4 Kubota Diesel (D902) Engine Throttle Setting

Preparation

1. Look for a piece of reflective tape on the fan belt pulley. If the reflective tape is missing, attach a small piece.
2. When measuring the rpm using a digital tachometer, aim the tachometer at this reflective strip while the engine is running.

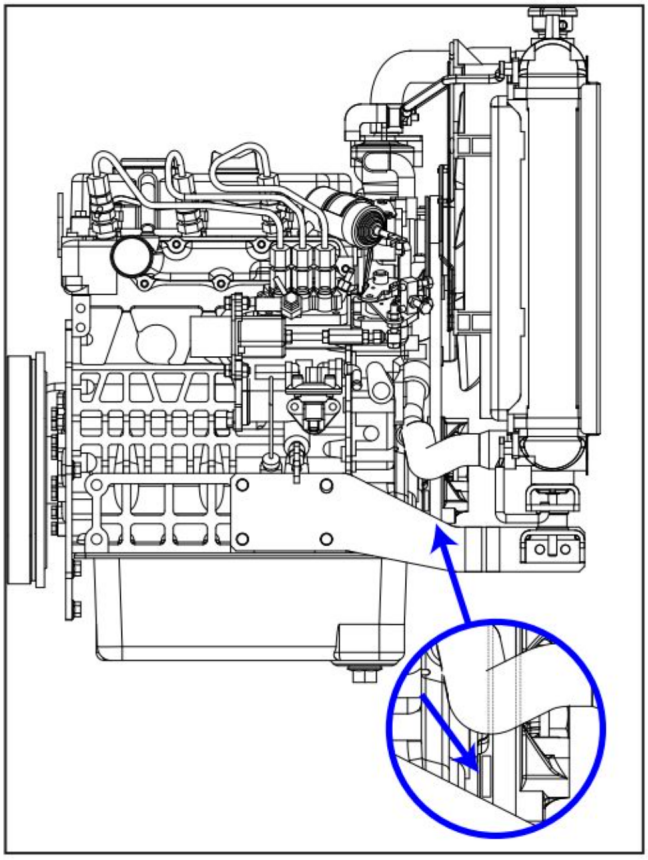

Figure 31

3. On the platform control box, set the low/high throttle switch to low. Start the engine and let it run until it reaches normal operating temperature, then switch it to high throttle for the next step.

High Throttle Check and Setting

4. Measure the rpm using a digital tachometer, as described in Step 2.
5. If the tachometer reads 3500 ±50 rpm , the high throttle is already properly set. No further action is required. If the tachometer reading is outside of the correct range, proceed to the next step to adjust it.
6. Adjust the high throttle by first loosening the jam nuts on either end of the long coupling nut, then turning the coupling nut and measuring the rpm until it reaches 3500 ±50 rpm.

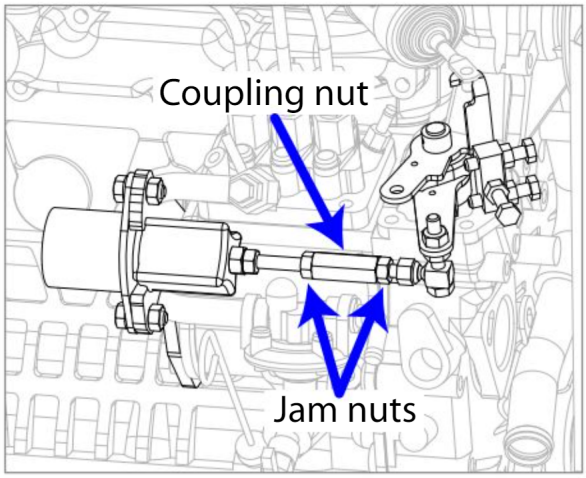

Figure 32

7. Once the correct rpm is reached, apply a drop of Loctite 242 to the threads, and tighten the jam nuts on each end.

Low Throttle Check and Setting

8. On the platform control box, set the low/high throttle switch to low.
9. With the engine in low throttle, measure the rpm using a digital tachometer, as described in Step 2.
10. If the tachometer reads 2050 ±50 rpm , the low throttle rpm is already properly set. No further action is required. If the tachometer reading is outside of the range given above, proceed to the next step to adjust it.
11. Adjust the low idle by first loosening the low idle stop jam nut, then turning the low idle stop screw and measuring the engine speed until it reaches 2050 ±50 rpm.

12. Once the correct rpm is reached, apply a drop Loctite 242 to the thread, and tighten the jam nut.

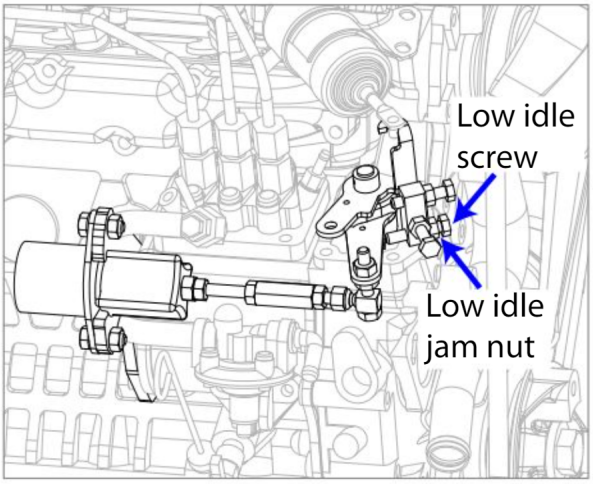

Figure 33

5.3-5 Replacing the Air Cleaner Element

Kubota recommends replacing the air cleaner element once a year. More frequent changes may be needed in dusty environments.

IMPORTANT

The air cleaner uses a dry element. Never apply oil to it.

1. Unlatch and remove the air cleaner cap. Use a cloth to clean any dirt or dust from out of the cap.
2. Remove the old air cleaner element by pulling it straight out.

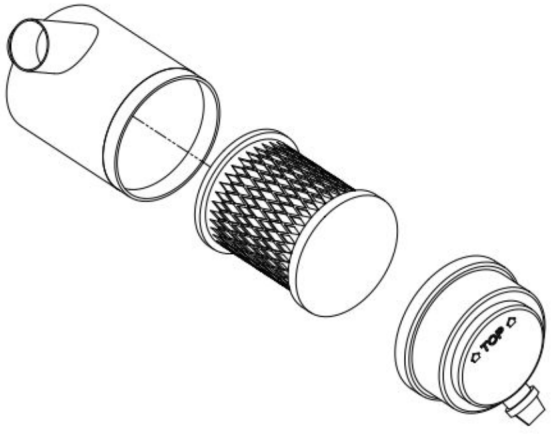

Figure 34

3. Install a new air cleaner element, pushing firmly to seat it.
4. Reinstall and latch the air cleaner cap, ensuring the *TOP* mark is facing up.

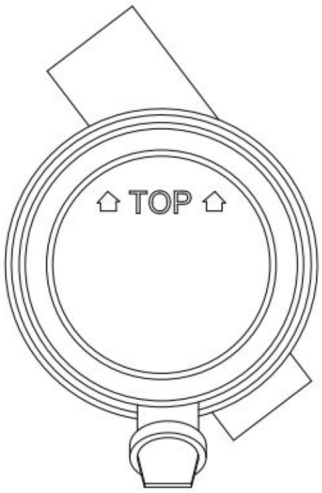

Figure 35

5.3-6 Replacing the Fuel Filter Element (Kubota D902)

Kubota recommends replacing the fuel filter every 400 hours.

1. Close the fuel filter lever (turn counterclockwise).
2. Unscrew the retaining ring and remove the filter cup.
3. Remove the old fuel filter element.
4. Rinse the inside of the cup with diesel fuel or kerosene.
5. Install a new fuel filter element, and reassemble the fuel filter cup and retaining ring, ensuring all components are free of dirt and dust.
6. Bleed the fuel system of air (refer to 5.2-7).

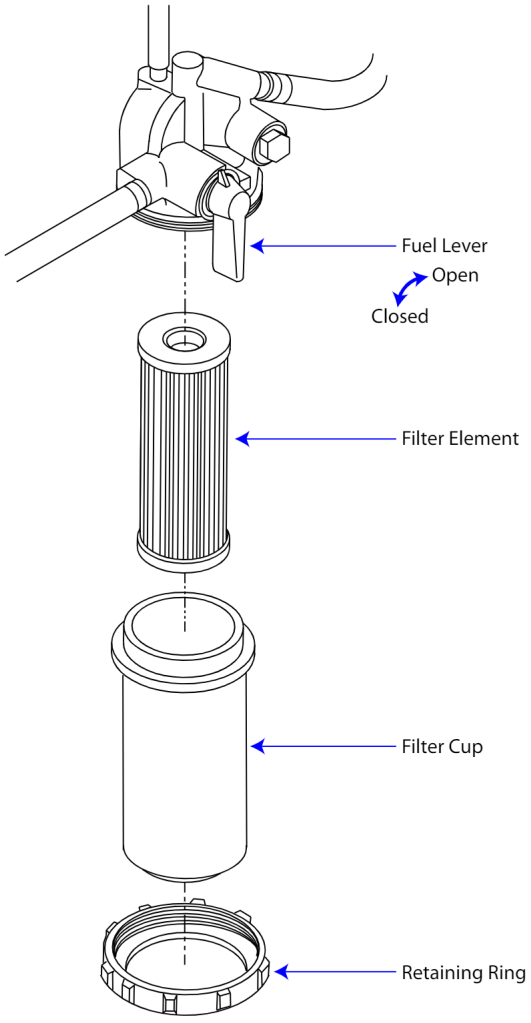

Figure 36

5.3-7 Bleeding the Fuel System of Air (Kubota D902)

Bleeding the fuel system of air is required after changing fuel hoses or filters, or after the fuel tank has become empty.

1. Allow the engine to cool, if it has been running.
2. Fill up the fuel tank with fuel.
3. Open the fuel filter lever (vertical position).

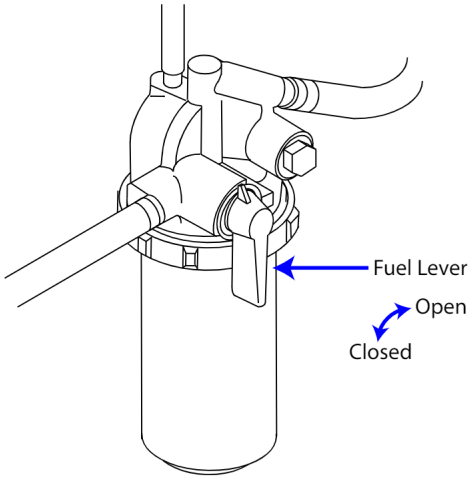

Figure 37

4. Open the air vent plug on the top of the fuel injection pump a few turns. Some air bubbles should come out.

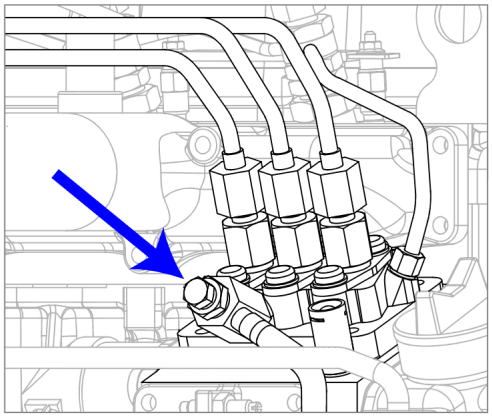

Figure 38

5. When no more air bubbles are seen, close the air vent plug.

5.3-8 Replacing the Oil Filter Cartridge

Kubota recommends replacing the oil cartridge every 400 hours.

IMPORTANT

Be sure to stop the engine before changing the oil filter cartridge.

1. Remove the old oil filter cartridge with a filter wrench.

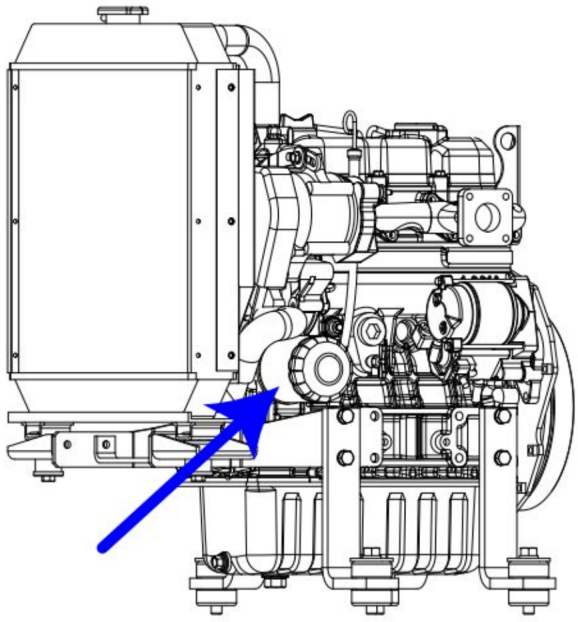

Figure 39

2. Prepare a new filter cartridge by applying a light coating of oil to the new cartridge gasket.
3. Install the new cartridge by screwing it in by hand.

IMPORTANT

Do not over tighten the filter as it may cause deformation of the rubber gasket.

4. The engine oil level normally decreases a little after replacing the oil filter cartridge, so run the engine for 10 to 15 minutes, then shut it off and allow it to cool.
5. Check for oil leaks around the gasket, and if no leaks are found, check the oil level using the dipstick.
6. Replenish the oil if needed.

5.3-9 Changing the Oil

Kubota recommends changing the oil every 200 hours.

1. With the aerial platform on a level surface, start the engine and warm it up for approximately 5 minutes. Shut off the engine.
2. Place a container underneath the engine's oil pan drain plug.
3. Remove the drain plug, and allow the oil to drain completely.
4. Screw the plug back into the oil pan, tightening it to 24 – 27 ft•lb (33 – 37 N•m).
5. Unscrew one of the oil filler caps and fill the engine with new oil, up to the upper line on the dipstick. Reinstall the cap.

Above 25°C (77 °F)	SAE30, SAE 10W-30 or 10W-40
0° to 25°C (32°F to 77°F)	SAE20, SAE10W-30 or 10W-40
Below 0°C (32°F)	SAE10W, SAE10W-30 or 10W-40

IMPORTANT

If changing to a different oil manufacturer or different oil viscosity, be sure to completely drain all of the old oil first before refilling with new oil. Do not mix oil of different types.

6. Start the engine and run it for 10 to 15 minutes, checking for leaks at the oil pan drain plug.

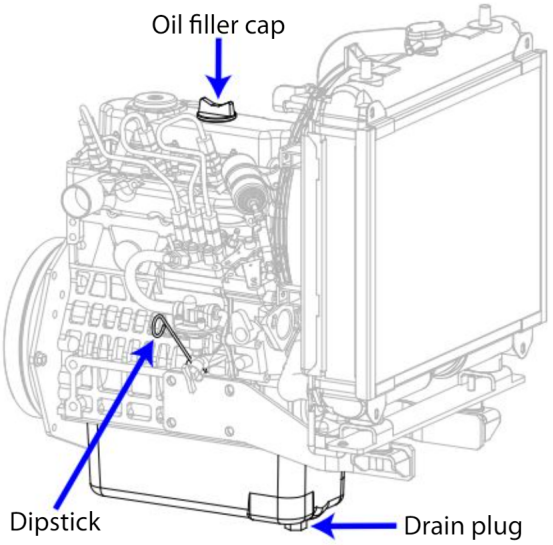

Figure 40

5.3-10 Checking and Replenishing the Radiator Coolant Level

Kubota recommends checking the coolant level daily.

Checking and Replenishing Coolant

1. Check the coolant level via the recovery tank. Coolant should be between the FULL and LOW marks.
2. If the coolant is too low, determine the cause and remedy it by following Step A or B below:

A – Leaks

3. Inspect both drain plugs and the radiator hoses. Repair or replace faulty or leaking components.
4. Pre-mix 50% long-life coolant and 50% clean, soft water, stirring it well, and replenish the recovery tank up to the FULL line.

IMPORTANT

Do not intermix different brands of coolant. If the existing coolant cannot be identified, drain the remaining coolant and refill with new coolant. Refer to 5.2-11 for instructions on draining the coolant.

B – Evaporation

5. Replenish the recovery tank up to the FULL line with clean, soft water.

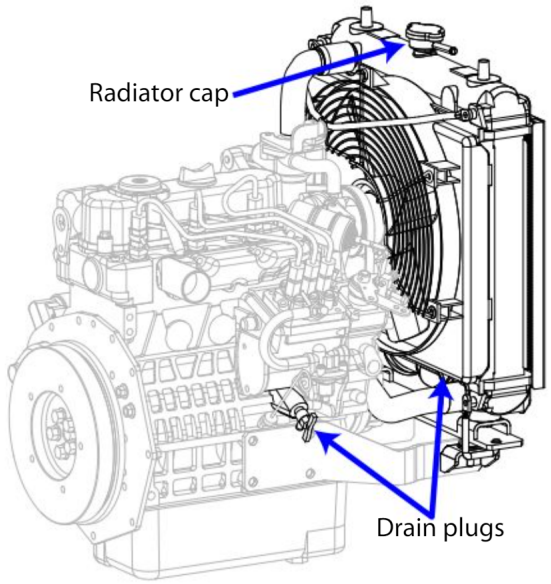

Figure 41

5.3-11 Draining and Refilling the Radiator

Kubota recommends completely draining and replacing coolant once a year.

⚠ WARNING

Do not remove the radiator cap until the coolant had dropped below its boiling point.

1. Place containers under the drain plugs to catch the coolant. One drain plug is located on the underside of the radiator, and the other on the body of the engine.
2. Open both drain plugs, and slowly open the radiator cap to relieve pressure. Then open the radiator cap fully. The coolant will start to drain.
3. Place a container under the recovery tank, and disconnect the overflow hose from the underside of the tank. Drain the tank.
4. When all the coolant has drained from the radiator, engine, and recovery tank, reconnect the recovery tank hose, and close both drain plugs.
5. Pre-mix 50% long-life coolant and 50% clean, soft water, stirring it well.
6. Refill the radiator, venting air from the upper and lower radiator hoses by jiggling them while filling the radiator with coolant. The coolant should reach the FULL line on the recovery tank, but not go past it.
7. Securely close the radiator cap.
8. Start the engine and run it for a few minutes, then shut it off.
9. Check the coolant level on the recovery tank once again, and add more coolant to the tank if needed.

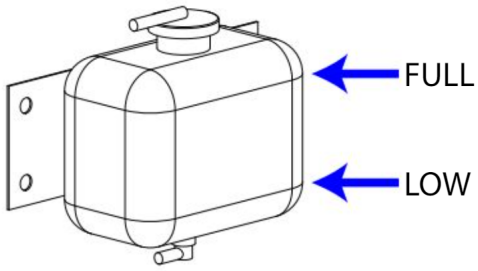

Figure 42

5.4 Outriggers

5.4-1 Auto-Leveling Outrigger PC Board Layout

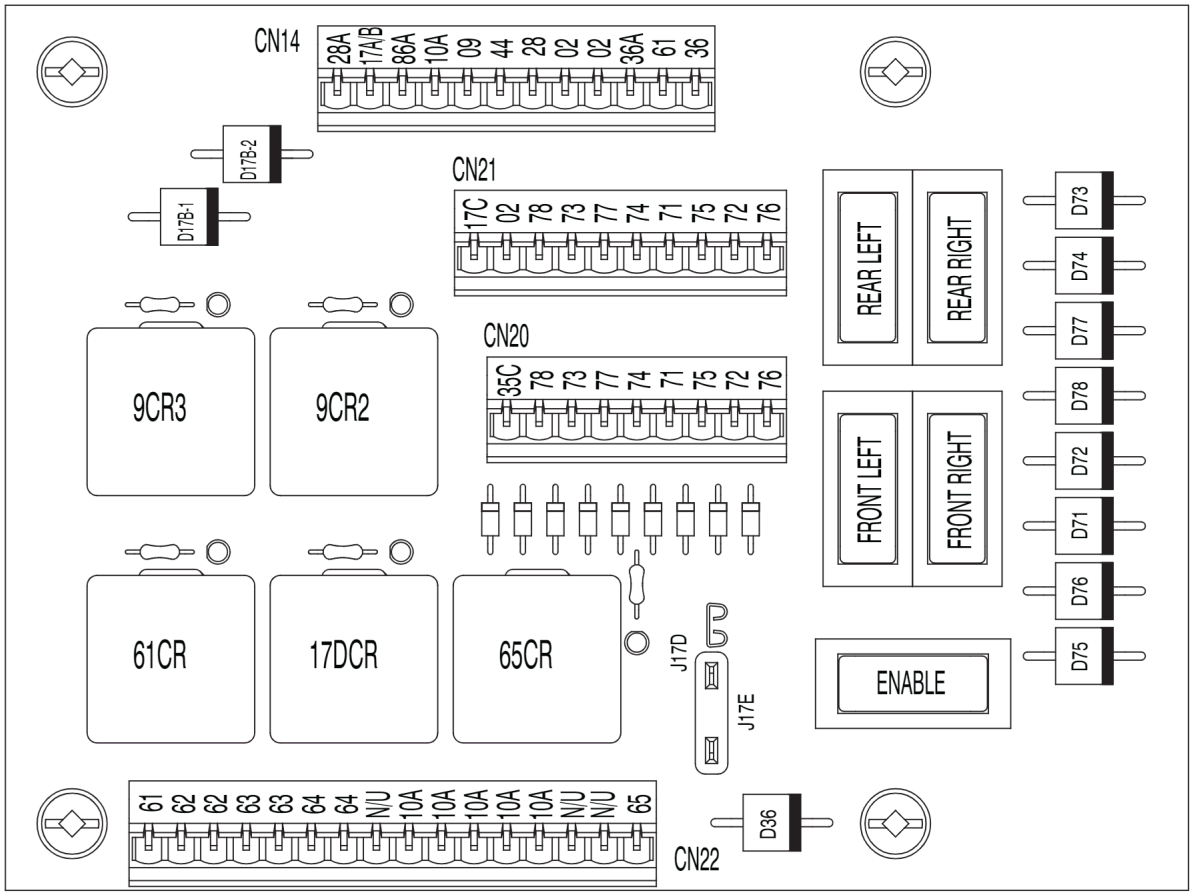

Figure 43

5.4-2 Outrigger Mechanical Limit Switch Wiring Diagram

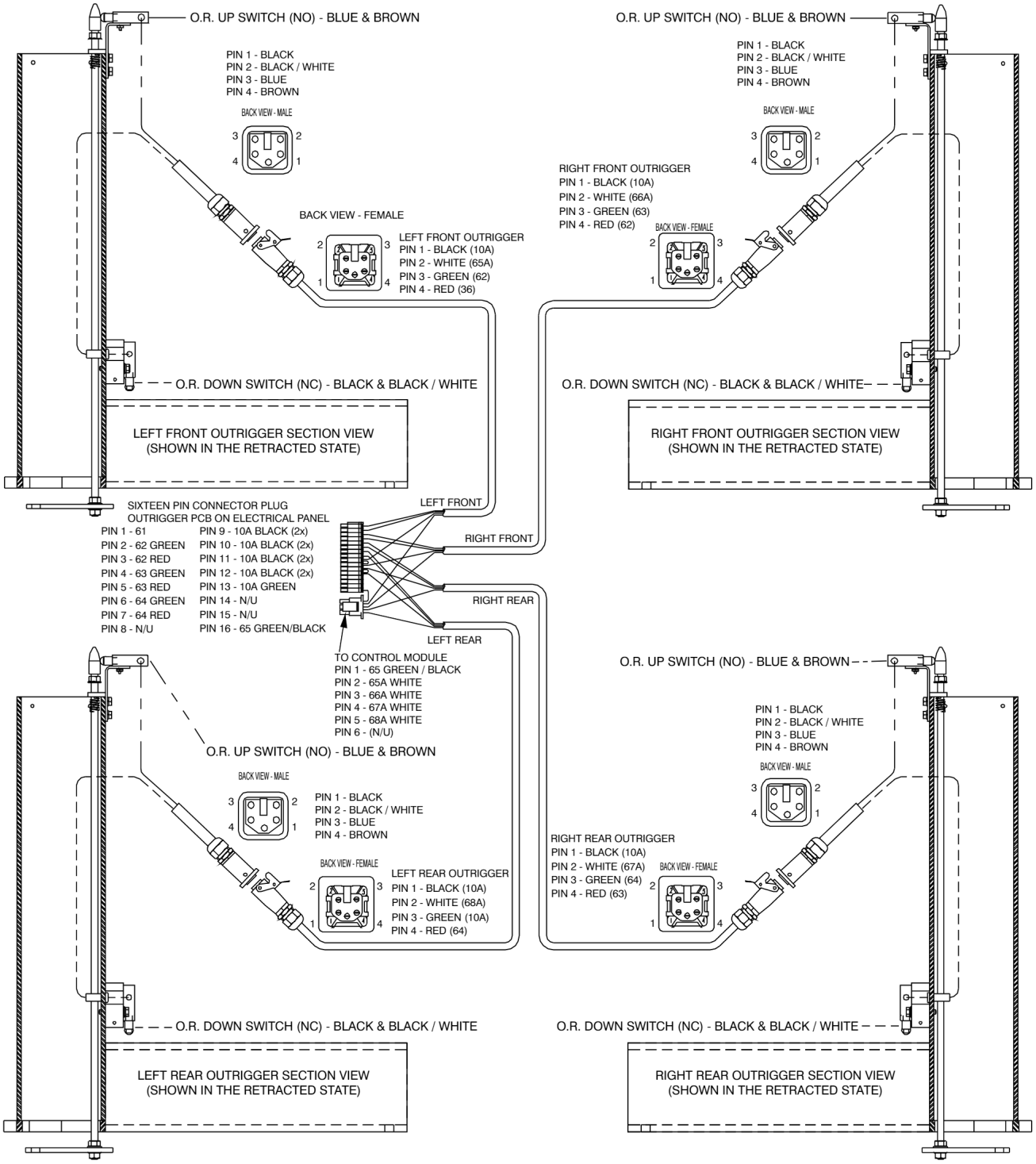

Figure 44

5.4-3 Auto-Leveling Outrigger Settings and Error Codes

Reading the Codes:

Error codes are indicated with the flashing LED on the control module. When there is a fault, the LED on the outrigger control module flashes to indicate the error code number.

Identify the error code by counting the flashes as follows:

1. The first digit is indicated by half-second flashes followed by half-second pauses.
2. A 2.5-second pause follows.
3. The second digit is then indicated by half-second flashes followed by half-second pauses.
4. A 5-second pause follows, then the cycle repeats.

Codes are continuously displayed by the LED until the fault is cleared, the outrigger control module is reset and no longer detects the fault, or idle timeout becomes active.

Since the outrigger control module only reports one error, only one code can be read from the LED per instance. If the error is cleared and another error is present, it will then be presented.

LED ERROR CODES

EVERYTHING OK	ON
VEHICLE TILTED	1-Jan
OUTRIGGERS CANNOT BE MOVED!	2-Jan
OUTRIGGERS NOT HOME	2-Feb
NOT FULLY LEVEL	1-Feb
RELEASE OUTRIGGER DEMAND!	5-May
CHECK OUTRIGGER SUPPLY (P4-9)	2-May
CANNOT LEVEL : BAD TILT SENSOR	1-Jul
OUTRIGGERS MANUALLY CONTROLLED!	6-Jun
TESTING HWFS	8-Jul
B+ SUPPLY TOO LOW	1-May
STARTUP!	7-Jul
FAULT: BAD SLAVE MICRO	5-Jul
FAULT: BAD TILT SENSOR	1-Jul
FAULT: BAD HWFS	2-Jul
FAULT: P2-5 FAULTY	1-Aug
FAULT: P2-6 FAULTY	2-Aug
FAULT: P2-8 STUCK ON	3-Aug
FAULT: P2-8 ALWAYS ON	4-Aug
FAULT: P2-8 ALWAYS OFF	5-Aug
FAULT: HWFS STALLED!	6-Jul

60402AB

5.4-4 Auto-Leveling Outrigger Error Code Breakdown

LED Flash Code	Meaning	Action
5/5	RELEASE OUTRIGGER DEMAND!	Check inputs on P2 pins 5 & 6 - the “auto-level” or “auto-retract” input is active at power-on or when it is not allowed to carry out the function.
1/2	OUTRIGGERS CANNOT BE MOVED!	Check input on P2 pin 10 – “auto-level” or “auto-retract” has been requested but the platform is elevated.
2/1	NOT FULLY LEVEL	The outrigger legs are all down (touching the ground) but the platform is not fully level.
2/2	OUTRIGGERS NOT HOME	The outrigger legs are not all down (touching the ground) and also are not all home (fully retracted).
5/1	B+ SUPPLY TOO LOW	Check that the battery voltage is not too low.
5/2	CHECK OUTRIGGER SUPPLY (P4-9)	Check that the battery voltage is not too low.
1/1	VEHICLE TILTED	These is not a true fault – move the vehicle to level ground!
7/8	TESTING HWFS	These are not true faults unless they do not clear – the start-up tests should only occur for a short time
7/7	STARTUP!	These are not true faults unless they do not clear – the start-up tests should only occur for a short time
6/8	OUTRIGGERS MANUALLY CONTROLLED!	This is not a true fault – the outriggers are being manually operated (one or more outrigger legs on P4 pins 1-8 is high, when the outrigger control module is not active

These are internal faults. If the fault persists after the power has been reset, the outrigger control module may need to be replaced.

5.4-5 Hand Held (EZcal) Calibration / Diagnostic Tool Key Functions

⚠ WARNING

Only trained and authorized personnel shall be permitted to service an aerial platform.

⚠ WARNING

Read all instructions closely before attempting each phase of this procedure.

Outrigger Settings

Model	6826RT	6832RT
O.R. Settings	7	7

SYMBOL	KEY FUNCTIONS
ESC ENTER	**ESC/ENTER BUTTONS** To move back and forth between menu and sub-menu
◁ ▷	**LEFT/RIGHT BUTTONS** Select menus and setting to be adjusted
△ ▽	**UP/DOWN BUTTONS** Adjust setting values

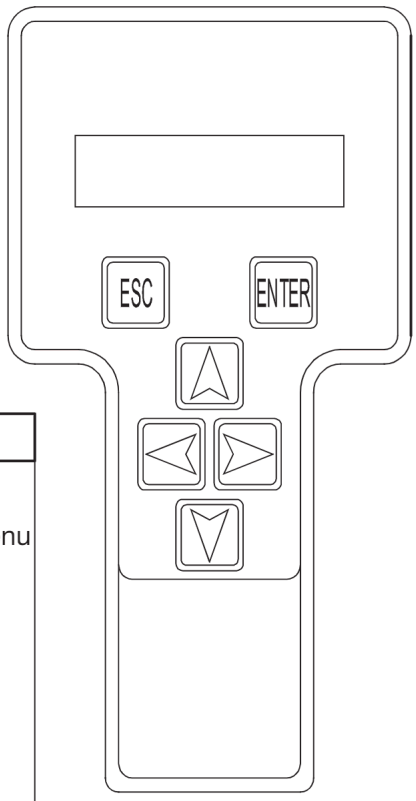

M62172AA

Figure 45

Outrigger Settings

Model	**6826RT**	**6832RT**
O.R. Settings	7	7

5.4-6 Outrigger Control Module (OCM1) Instructions

When an EZcal hand-held device is connected to the OCM1, a two line display shows various menus and settings. At any time the top line of the display describes the currently selected menu. The bottom line shows the currently selected item in that menu.

Top Level Menu Options	
Help	Select This Menu To See A Description Of Current OCM1 Status
Diagnostics	Select this menu to see switch input status and logged data
Access Level	Select this menu and enter correct code to enable adjustments and calibrations
Adjustments	Select This menu to see and adjust OCM1 settings. NOTE: this menu provides adjustments which may be needed for different work activities
Setups	Select this menu to carry out initial set-up of the OCM1. NOTE: This menu provides set-ups needed to configure the OCM1 for a particular vehicle.

Help Menu Options	
(help message)	A message displays current OCM1 status, indicating if everything is OK or if there is an error code (see LED Error Codes – Table 5.3)

Diagnostic Menu Options	
System	Select this menu to see general OCM1 system information.
Switches	Select this menu to see switch input status
Outputs	Select this menu to see OCM1 output status
Log	Select this menu to see logged information

Diagnostic / System Menu Options	
Outriggers	Displays various status during the auto-level function
Tilt	Displays vehicle tilt in X and Y orientations measured by integral sensor
Tilted	Displays whether vehicle is tilted (YES or NO)
Battery	Displays battery supply voltage (on P2-12)

Diagnostic / Switches Menu Options	
LR/P2-1	High when the left rear outrigger is in contact with the ground.
RR/P2-2	High when the right rear outrigger is in contact with the ground
RF/P2-3	High when the right front outrigger is in contact with the ground
EXTEND/P2-5	High to activate the auto-level function
RETRACT/P2-6	High to activate the auto-retract function
ELEV/P2-10	High when the scissor stack is stowed (elevated input indicates that the vehicle is stowed).

Diagnostic / Outputs Menu Options	
LAMP/P2-7	Displays state of outrigger control box light
STABLE/P2-8	Displays state of stable (all legs touching the ground) output
TILT/P2-9	Displays state of tilt
LRe/P4-1	Displays state of left rear outrigger extend valve
RRe/P4-2	Displays state of right rear outrigger extend valve
RFe/P4-3	Displays state of right front outrigger extend valve
LFe/P4-4	Displays state of left front outrigger extend valve
LRr/P4-5	Displays state of left rear outrigger retract valve
RRr/P4-6	Displays state of right rear outrigger retract valve
RFr/P4-7	Displays state of right front outrigger retract valve
LFr/P4-8	Displays state of left front outrigger retract valve
P4-9 MON	Displays the voltage to the outrigger valve (can only be seen when operating in auto-level or retract)

Diagnostic / Log Menu Options	
MAX.BATTERY	Displays maximum recorded battery supply voltage
OCM1 version	Displays part number and software version of GP106
EZcal version	Displays software version of EZcal

Access Level Menu Options	
CODE xxxx	ACCESS LEVEL 3 (allows viewing only) ACCESS LEVEL 2 (allows setup on OCM1)

Adjustments Menu Options (factory set – not adjustable)	
Xtilt TRIP	Displays the tilt trip point in the X orientation
Ytilt TRIP	Displays the tilt trip point in the Y orientation
TILT ENTRY	Displays the tilt delay time
TILT EXIT	Displays the tilt delay time
Xlevel TRIP	Displays the tilt trip point in the X orientation during the auto-level function
Ylevel TRIP	Displays the tilt trip point in the Y orientation which applies during the auto-level function

Machine Setup Menu Options (factory set – not adjustable)	
DEFAULTS	Allows all adjustments and machine settings to be set to defaults. WARNING: All GP106 settings will be changed. Use with caution!
CALIBRATE LEVEL	Allows levelling of the integral tilt sensor of the GP106, when the vehicle is positioned on level ground (see Appendix 4 ??).
TILT MODE	Allows configuration of the GP106 tilt output (P2-9): **1.** Output turns on to light lamp when tilted. **2.** Output turns off to cutout functions when tilted **3.** Output turns off to cutout functions when tilted AND elevated
TILT FILTER	Displays the filter applied to the tilt measurements during the auto-level function (used to minimize the effect of vehicle vibrations on the tilt measurement).
Xlevel TARGET	Displays the tilt in the X orientation at which the auto-level function will complete.
Ylevel TARGET	Displays the tilt in the Y orientation at which the auto-level function will complete.
tilt SLACK	Displays the amount of vehicle tilt exceeding the Xtilt TARGET and/or Ytilt TARGET in which the auto-level function does not attempt to level. *Example*: Xtilt TARGET=0.3°, Ytilt TARGET=0.7°, tilt SLACK=0.5° If machine is tilted to 1.0° in the X and Y orientations, the auto-level function will attempt to level the X orientation (0.3+0.5<1.0) but does not attempt to level the Y orientation (0.7+0.5>1.0) RANGE: 0.0° to 1.0°, default 0.3°

IMPORTANT

Each phase must be completed before the next phase can be carried out. All phases must be completed before the aerial platform can be operated. Always follow the instructions of the Calibration instrument.

1. Ensure aerial platform is parked on a firm and level surface.
2. Elevate the scissors high enough to lay a level across the base tubes. Ensure there is no debris on the base and the level sits flat. Do not elevate aerial platform higher than the high speed/tilt override limit switch.
3. Manually operate the outriggers and level the machine in 4 places: left side, right side, front and rear. All 4 outriggers must be firmly placed and all 4 tires are off the ground.
4. Double check that the aerial platform is level at all 4 points.
5. Connect the EZcal tool to the P1 connector on the **CONTROL MODULE**.
6. The display will show **Help: Press Enter**.
7. By using Left/Right buttons, select the **Access Level (3)** from the menu and press the **ENTER** button.
8. The display will show **Access Level: Code (0000)**.
9. By using the Up/Down buttons, enter the Access Level Code (1 ➔1 ➔ 2 ➔ 2) followed by pressing the **ENTER** button.
10. The display will show **Access Level 2**. By using Left/Right buttons, select the **Setups** from the menu and press the **ENTER** button.
11. The display will show **Setups: Change Defaults**. Select the **Change Defaults** from the menu and press the **ENTER** button.
12. The display will show **Defaults, 0 = Custom**. By using Up/Down buttons, select the Defaults: Code Setting for your Model (For Default Code, refer to Outrigger Settings on page 133) from the menu.
13. Press **ENTER** and followed by **ESCAPE**.
14. The display will show **Setups Change Defaults**. By using Left/Right buttons, select the **Calibrate Level** from the menu and press the **ENTER**.
15. The display will show **Calibrate Level: Yes: Enter, No: ESC**. Select the **Yes** from the menu by press the **ENTER** button.
16. The display will show **Calibrate Level: Tilt 0.0' , 0.0'**. Select the **ESCAPE** from the menu once.
17. The display will show **Setups Calibrate Level** Select the **ESCAPE** from the menu once again.
18. The Calibration procedure is complete, unplug and remove the EZcal.
19. Close the hydraulic/electric cabinet.

5.4-7 Auto-Leveling Outrigger Control Module Pin Reference Table

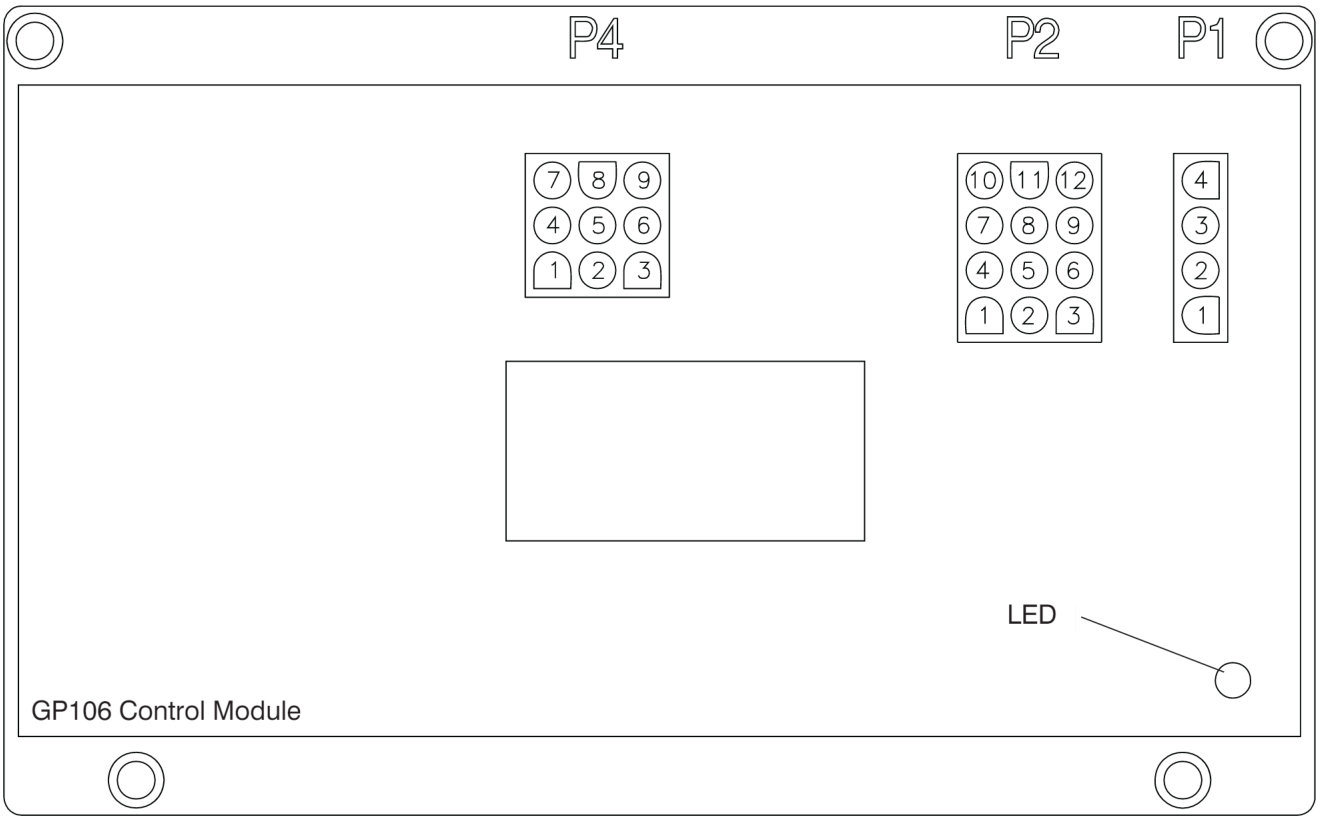

PLUG	PIN #	WIRE # AND COLOUR	WIRE FUNCTION
P1	The Calibration Connection		
P2	1	68A White	Input indicating that the LEFT REAR outrigger is in contact with the ground
P2	2	67A Red/White	Input indicating that the RIGHT REAR outrigger is in contact with the ground
P2	3	66A Blue/White	Input indicating that the RIGHT FRONT outrigger is in contact with the ground
P2	4	65A Green/White	Input indicating that the LEFT FRONT outrigger is in contact with the ground
P2	5	70 Green/Black	Input for AUTO-LEVEL function to extend the outriggers to level the machine
P2	6	79 Green	Input for AUTO-RETRACT function to retract the outriggers until the switch is released
P2	7	70A Red/White	Outrigger Light on Outrigger Control Box
P2	8	65 Green/Black	STABLE output to indicate that all outriggers are in contact with the ground
P2	9	28 Green	TILT output to indicate that the machine is level (ANSI/CSA only)
P2	10	44 Green	Tilt override / High Drive Cutout
P2	11	02 White	Negative Input
P2	12	10A Black	Main Power Input
P4	1	78 Black/White	Output used to extend the LEFT REAR outrigger
P4	2	77 Blue/Black	Output used to extend the RIGHT REAR outrigger
P4	3	76 Red/Black	Output used to extend the RIGHT FRONT outrigger
P4	4	75 Orange/Black	Output used to extend the LEFT FRONT outrigger
P4	5	74 Black	Output used to retract the LEFT REAR outrigger
P4	6	73 Blue	Output used to retract the RIGHT REAR outrigger
P4	7	72 Red	Output used to retract the RIGHT FRONT outrigger
P4	8	71 Orange	Output used to retract the LEFT FRONT outrigger
P4	9	35C White/Black	Power input for outriggers

60401AC

5.4-8 Outrigger Upper Limit Switch (LS61, LS62, LS63, LS64) Replacement and Adjustment

Machine Preparation

1. Ensure the aerial platform is parked on a firm level surface.
2. Fully retract the outriggers.
3. Turn the main power disconnect switch off.
4. Chock or block the wheels to keep the aerial platform from rolling forward or backward.

Limit Switch Removal

1. Remove the bolts and washers securing the upper limit switch/hose cover. Set aside the hardware and cover for reinstallation later.
2. Remove the washers, bolts, and nuts securing the limit switch to the bracket. Set aside for reinstallation later.

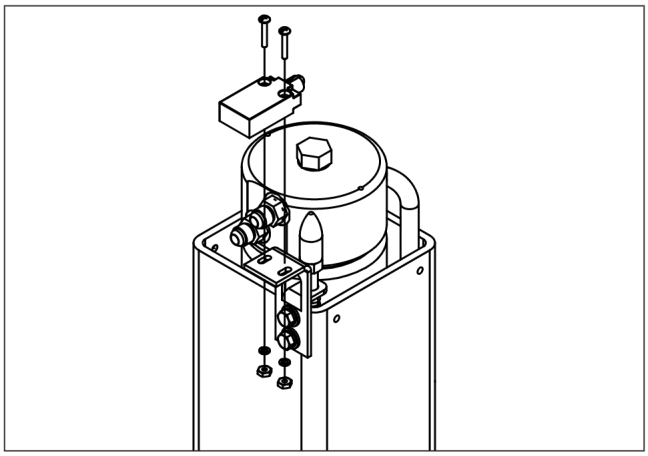

Figure 46

3. Remove the limit switch cable from the split loom tubing, cutting tie wraps and tape as needed to free it.
4. Disconnect the connector, and remove the limit switch wires and ferrules, retaining the connector for reuse later. Discard the old limit switch and cable.

Limit Switch Replacement

1. Mount the new limit switch loosely on the bracket, using the hardware removed previously.
2. Starting from the top, place the new limit switch cable in the split loom.
3. Adjust the cable in the split loom as needed, and close the split loom by wrapping electrical tape around it at regular intervals. Tie wrap the split loom to the hoses.
4. Cut off any unneeded length from the cable, and strip the end to exposed the wires beneath.
5. Strip the ends from each wire and crimp a ferrule to each wire end.
6. Insert the wires into the connector end removed previously. (Refer to 3.17 Outrigger Harness Wiring Diagram.) Reconnect the connector.

Limit Switch Adjustment

1. With the outriggers retracted, slide the limit switch on the bracket until the plunger is depressed against the actuator rod cap. Apply a small amount of Loctite to the bolts, and tighten the bolts and nuts.

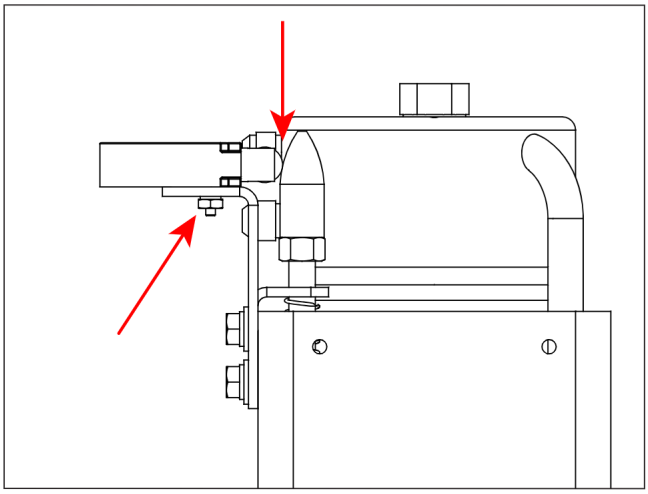

Figure 47

Limit Switch Testing

1. Turn main power disconnect switch to the ON position, and start the engine.
2. With the outriggers fully retracted, the unit should be drivable. With the outriggers extended more than halfway, the unit should not be drivable.

5.4-9 Outrigger Lower Limit Switch (LS65, LS66, LS67, LS68) Replacement and Adjustment

Machine Preparation

1. Ensure the aerial platform is parked on a firm level surface.
2. Fully retract the outriggers.
3. Turn the main power disconnect switch to the OFF position.
4. Chock or block the wheels to keep the aerial platform from rolling forward or backward.

Limit Switch Removal

1. Remove the bolts and washers securing the upper limit switch/hose cover. Set aside the hardware and cover for reinstallation later.
2. Remove the screws securing the lower limit switch cover. Set aside the hardware and cover for reinstallation later.
3. Remove the washers and screws securing the limit switch to the mount. Set aside for reinstallation later.

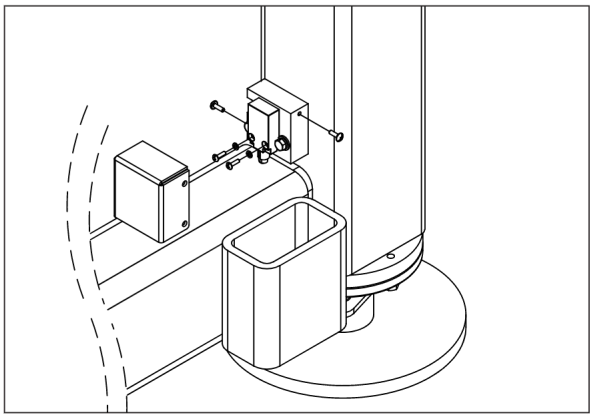

Figure 48

4. Cut the tie wraps and tape around the split loom as needed to expose the limit switch cable.
5. Disconnect the applicable wires from the connector, and cut the ferrules off of the wires at the end of the cable. Retain the connector for reuse later.
6. Remove the cable from the split loom. Gently pull the cable down through the outrigger weldment, and through the rubber grommet. Retain the rubber grommet. Discard the old limit switch and cable.

Limit Switch Replacement

1. Install a new limit switch to the mounting block using the hardware removed earlier.
2. Feed the new cable through the rubber grommet, and place the grommet in the hole in the outrigger weldment.
3. Feed the cable up through the outrigger weldment, until it comes out the top.
4. Working from top to bottom, adjust the cable in the split loom and close the split loom by wrapping electrical tape around it at regular intervals. Tie wrap the split loom to the hoses.
5. Cut off any unneeded length from the cable, and strip the end to exposed the wires beneath.
6. Strips the ends from each wire and crimp a ferrule to each wire end.
7. Insert the wires into the connector end removed previously. (Refer to 3.17 Outrigger Harness Wiring Diagram.) Reconnect the connector.

Limit Switch Adjustment

1. Loosen the bolts securing the mounting block to the outrigger, and slide the block until the limit switch plunger is depressed halfway against the base weldment. Apply a small amount of Loctite to the bolts, and tighten them.

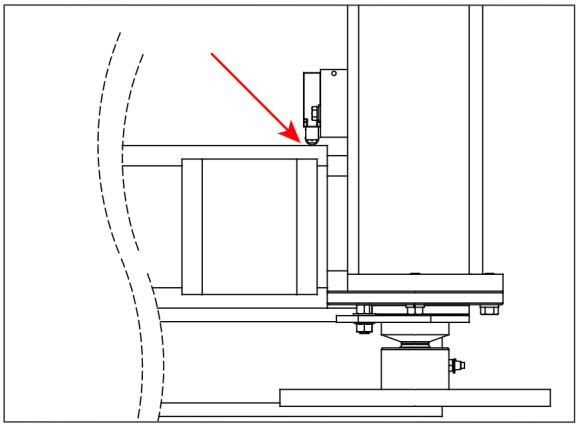

Figure 49

Limit Switch Testing

1. Turn main power disconnect switch to the ON position, and start the engine.
2. With the outriggers fully retracted, the unit should be drivable. With the outriggers extended more than halfway, the unit should not be drivable.

5.5 Scissors

5.5-1 High Speed Cutout Limit Switch (LS5) Replacement and Adjustment

Machine Preparation

1. Ensure the aerial platform is parked on a firm level surface.
2. Chock or block the wheels to keep the aerial platform from rolling forward or backward.

Limit Switch Removal

1. Raise the platform to give access to the limit switch cable, and deploy the maintenance stand.
2. Turn the main power disconnect switch off.
3. Remove the gear clamp securing the limit switch cover, and slide the limit switch cover off of the pin. Set aside the clamp for reinstallation later.
4. Remove the bolts, washers, and nuts (x2) securing the limit switch to the cover. Set the cover and hardware aside for reinstallation later.

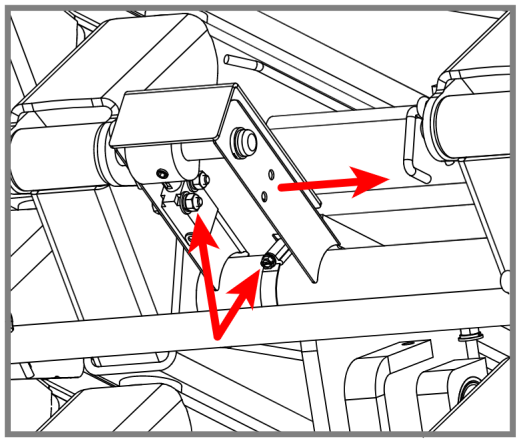

Figure 50

5. Remove the limit switch and free the limit switch cable by cutting the tie wraps.
6. Follow the cable into the electrical panel, and disconnect the limit switch wires from the electrical panel. Discard the limit switch.

Limit Switch Replacement

1. Mount the new limit switch (**122010**) on the cover, using the hardware removed previously (apply a small amount of Loctite to the bolts).
2. Slide the limit switch cover back onto the pin. Secure it with the gear clamp removed previously.

Limit Switch Electrical Connections

1. Route the new limit switch cable along the same path as the old one into the electrical panel cabinet. Use tie wraps as needed to secure them at regular intervals.
2. Strip the cable jacket back to separate the wires. Cut the wires to length if needed, and strip the ends.
3. Crimp a 18 GA red ferrule onto the end of the blue wire, and a 14-16 GA x 1/4 Terminal onto the end of the brown wire.
4. Connect both wires to the electrical panel. (Refer to 3.21 Electrical Panel Wiring Diagram S/N 37000235 and above.)
5. Stow the maintenance stand and fully lower the platform.

Limit Switch Cam Setup

1. Turn the main power disconnect switch to the ON position, and start the engine.
2. Attach the end of a measuring tape to the side of the platform with a tie wrap, in such a way that the measuring tape will hang down freely to the ground.

NOTE

The end of the measuring tape should be level with the standing surface of the platform.

3. Raise the platform until the distance from the standing surface of the platform to the ground measures 7 ft (2.13 m).

4. Loosen the set screws (x2) on the limit switch cam, and rotate the cam until it releases the limit switch plunger. Apply a small amount of Loctite to both set screws, and tighten them.

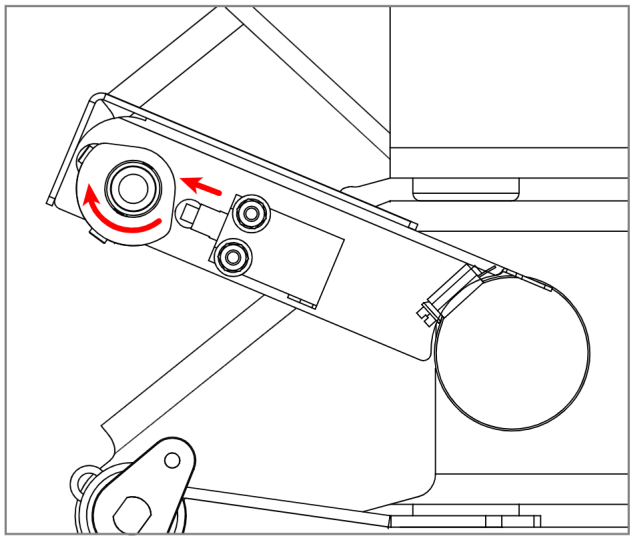

Figure 51

5.5-2 High Speed Cutout Limit Switch Testing

1. Raise the platform less than 84 in (213 cm), and drive the unit at full speed. The unit should move at high speed.
2. Then raise the platform over 84 in (213 cm). Drive forward with joystick fully forward. Machine should drive in low speed.

NOTE

High Speed Cutout should occur within the tolerance zone of 81–87 in (206–221 cm).

5.6 Platform

5.6-1 Gate Springe Hinge Adjustment

1. The tension of the spring hinges should be such that when the gate is opened halfway and released, it will close fully and latch.
2. To adjust the tension of the spring hinges, first remove the safety locking screw located at the top or bottom of each hinge. Retain the screws for reinstallation later.
3. To increase the tension, insert a 5⁄32 hex wrench in the screw socket, and turn the wrench clockwise. To release the tension, depress the hex wrench in the socket, let it rotate counterclockwise, then release the hex wrench.

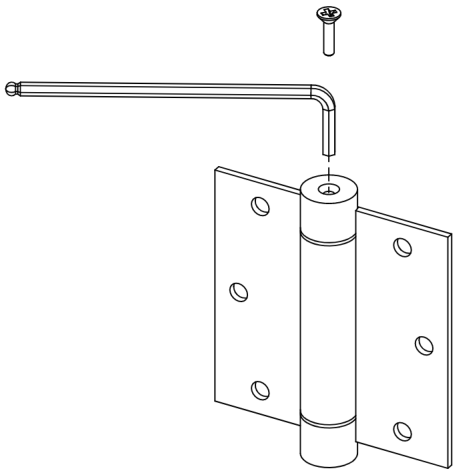

Figure 52

4. Adjust the tension on both hinges until the gate releases and latches from a half open position.
5. Reinstall the safety locking screws into the hinges when tension adjustment is complete.

Notes

www.skyjack.com